TRIAC®
CONTROLS
A Division of A-T Controls, Inc.

Pneumatic Rotary Actuators and Accessories

II 2 GD c IIC

ATEX CE 0425

PED CERTIFIED

SIL IEC 61508 / IEC 61511

FEATURES

TRIAC

TRIAC® pneumatic actuators are designed and manufactured to provide the highest cycle-life on the market. We can accessorize them to accomplish virtually any control requirement. They are available with various mounting dimension configurations and span eleven models for appropriate torque compatibility. Our extensive inventory and engineering capabilities allow us to respond to your needs with flexibility. We pride ourselves on exceeding customer expectations. Contact us for application assistance.

- Double acting and spring return
- Dual travel stops
- Torques to 36,000 In-lbs
- DA and SR common end caps
- ISO 5211 / DIN 3337 mounting pad dimensions
- Wide base for direct mount to many butterfly valves
- Substantial pinion bearings mean high cycle life
- Corrosion resistant hard anodized finish
- Each unit serialized
- VDI/VDE 3845 accessory mounting configuration
- Custom accessory mounting
- NAMUR solenoid mounting pad

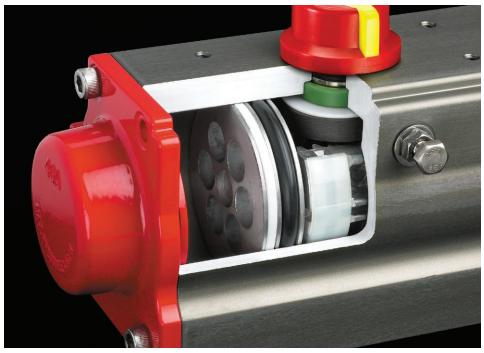

See accessory page for details

GENERAL TECHNICAL DATA

TRIAC

- Standard working temperature -5°F to 175°F
- Low temperature and high temperature option
- Maximum working pressure 150 psig
- Operating media - clean, dry air, non-corrosive gas or light hydraulic oil
- Air supply 40 psi - 150 psi
- Rotation 100°
- Dual travel stops standard
- Mounting dimensions
  - Accessories to NAMUR - VDI/VDE 3845
  - Valve mounting to ISO 5211 (TR10 - 2R3500)
  - Custom configurations available in quantity
- Permanently lubricated units

Operation

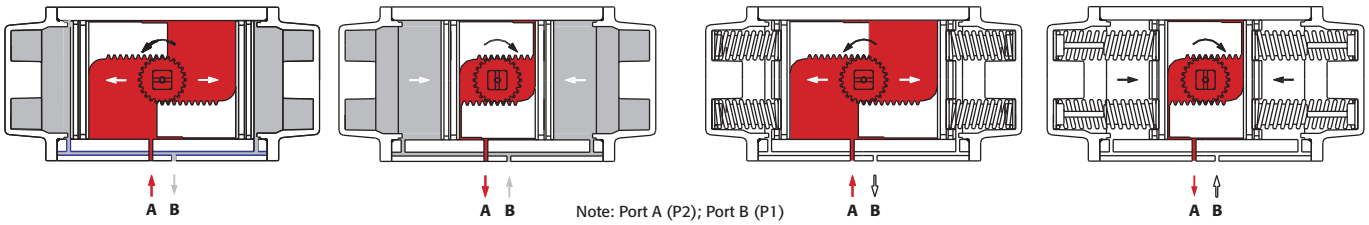

Note: Port A (P2); Port B (P1)

Double Acting Operation

CCW

Air is supplied to Port A forcing the pistons away from each other (toward ends), rotating drive pinion counterclockwise and exhausting air out of Port B.

CW

Air is supplied to Port B forcing the pistons toward each other (toward center), rotating drive pinion clockwise and exhausting air out of Port A.

Spring Return Operation

CCW

Air is supplied to Port A forcing the pistons away from each other (toward ends), rotating drive pinion counterclockwise, compressing springs and exhausting air out of Port B.

FAIL CW

Air failure (loss of pressure) allows compressed springs to force pistons toward each other (toward center), rotating drive pinion clockwise and exhausting air out of Port A.

*(Unit is capable of failure in counterclockwise direction by reversing pistons inside of housing.)

Torque Curves

TR10-2R1750 Rack & Pinion Design

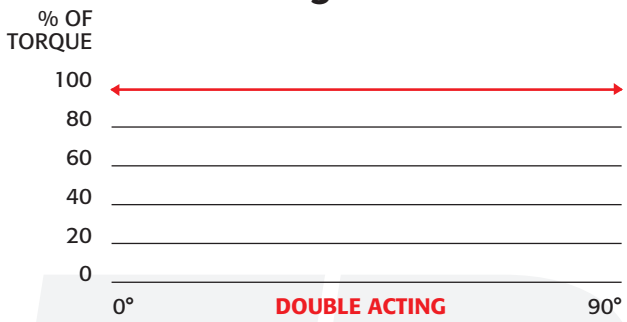

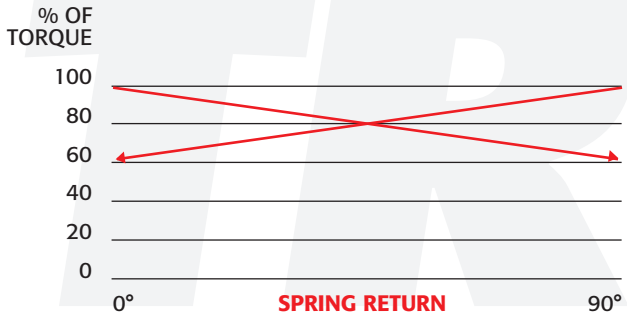

2R2500-2R3500 Scotch Yoke Design

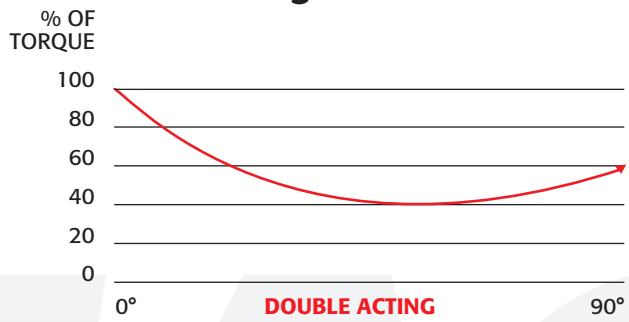

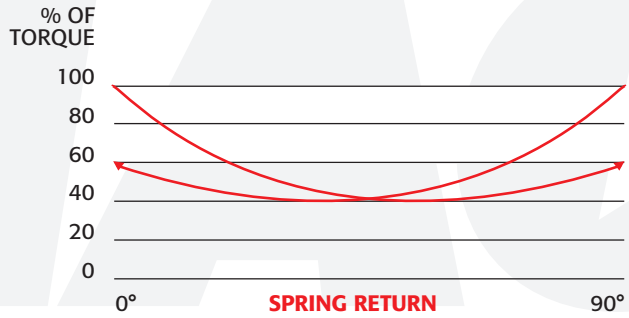

SPRING RETURN TORQUE (In-lbs)

		SPRING TORQUE		AIR SUPPLY 40 psi		60 psi		80 psi		100 psi	
MODEL	SPRINGS/ SIDE (5 Standard)	END	BREAK	END	BREAK	END	BREAK	END	BREAK	END	BREAK
TR20SR	2	19	31	36	48	77	89				
	3	29	49	20	40	60	80	94	115	139	160
	4	39	67			42	70	78	106	113	145
	5	49	84			25	60	61	96	105	135
	6	59	101					43	85	88	121
2R40SR	2	33	59	63	89	125	151				
	3	49	87	27	54	98	135	159	196		
	4	65	114			70	119	131	180	194	243
	5	82	142			43	103	103	164	165	226
	6	98	170					75	147	137	209
2R80SR	2	86	160	185	259	358	432				
	3	128	245	101	218	273	390	447	564		
	4	170	330			188	348	362	522	536	696
	5	215	410			109	304	282	477	455	651
	6	260	490					202	432	375	605
2R130SR	2	120	226	233	339	473	579				
	3	185	343	117	275	356	514	586	744		
	4	250	460			239	449	469	679	720	930
	5	315	573			127	385	357	614	607	864
	6	380	685					244	549	494	799
2R200SR	2	168	310	339	481	669	811				
	3	252	460	190	398	519	727	849	1,057		
	4	336	610			369	643	699	973	1,030	1,304
	5	420	760			220	560	549	889	879	1,219
	6	504	910					399	805	729	1,135
2R300SR	2	350	644	745	1,039	1,445	1,739				
	3	525	962	428	865	1,127	1,564	1,827	2,264		
	4	700	1,280			809	1,389	1,509	2,089	2,200	2,780
	5	880	1,605			485	1,210	1,184	1,909	1,874	2,599
	6	1,060	1,930					859	1,729	1,549	2,419
2R500SR	2	530	920	1,109	1,499	2,129	2,519				
	3	795	1,380	650	1,235	1,669	2,254	2,679	3,264		
	4	1,060	1,840			1,209	1,989	2,219	2,999	3,231	4,010
	5	1,325	2,300			750	1,725	1,759	2,734	2,769	3,744
	6	1,590	2,760					1,299	2,469	2,309	3,479
2R850SR	2	740	1,230	1,499	1,989	2,929	3,419				
	3	1,100	1,835	1,095	1,830	2,324	3,059	3,644	4,379		
	4	1,460	2,440			1,719	2,699	3,039	4,019	4,320	4,300
	5	1,815	3,050			1,110	2,345	2,429	3,664	3,709	4,944
	6	2,170	3,660					1,819	3,309	3,099	4,589
2R1200SR	2	1,050	1,820	2,029	2,799	4,189	4,959				
	3	1,575	2,730	1,120	2,275	3,279	4,434	5,169	6,324		
	4	2,100	3,640			2,369	3,909	4,259	5,799	6,140	7,680
	5	2,625	4,550			1,460	3,385	3,349	5,274	5,169	7,094
	6	3,150	5,460					2,439	4,749	4,259	6,569
2R1750SR	2	1,390	2,430	3,049	4,089	6,124	7,164				
	3	2,085	3,645	1,835	3,395	4,909	6,469	7,664	9,224		
	4	2,780	4,860			3,694	5,774	6,449	8,529	9,100	11,180
	5	3,475	6,075			2,480	5,080	5,234	7,834	7,884	10,484
	6	4,170	7,290					4,019	7,139	6,669	9,789

Torques shown are for 2R-Series (ISO), 2CI-Series (Centerline Direct Mount), and 2K Series (Keystone Direct Mount)

TR10DA - 2R1750DA

DOUBLE ACTING TORQUE (In-lbs)

	AIR SUPPLY (psi)				
MODEL	40	60	80	100	120
TR10DA	30	45	60	75	90
TR20DA	79	118	158	197	237
2R40DA	164	245	327	409	491
2R80DA	352	528	703	879	1,055
2R130DA	527	791	1,054	1,318	1,581
2R200DA	716	1,073	1,431	1,789	2,147
2R300DA	1,217	1,825	2,434	3,042	3,651
2R500DA	1,749	2,624	3,498	4,373	5,247
2R850DA	3,282	4,923	6,565	8,206	9,847
2R1200DA	4,510	6,765	9,020	11,275	13,530
2R1750DA	5,729	8,586	11,448	14,311	17,173

NOTE:
Torque shown are for 2R Series (ISO), 2CI Series (Centerline Direct Mount, and 2K Series (Keystone Direct Mount)

Torques are actual. Please be sure to include appropriate safety factors for all service condition variables when sizing.

3-way (master slave) assemblies should use a 35% safety factor. Call factory for assistance.

Spring Return (In-Lbs)
Spring Clockwise Direction

2R2500SR

	Air Break	Run	Air End	Spring Break	Run	Spring End
60 psi	9,854	4,000	5,612	6,000	2,500	3,480
80 psi	12,258	4,750	6,403	9,080	3,950	5,520

2R3500SR

	Air Break	Run	Air End	Spring Break	Run	Spring End
60 psi	19,700	8,000	11,200	12,000	5,000	6,900
80 psi	24,500	9,500	12,800	18,100	7,900	11,000

Double Acting (In-lbs)
Direct Acting

2R2500DA

	0 deg	Min	90 deg
60 psi	13,334	6,667	11,610
80 psi	17,778	8,890	15,483
100 psi	22,223	11,110	19,350

2R3500DA

	0 deg	Min	90 deg
60 psi	26,650	13,330	23,200
80 psi	35,550	17,750	30,960
100 psi	44,440	22,200	38,700

Spring Return (In-Lbs)
Spring Counter Clockwise Direction

2R2500SR

	Air Break	Run	Air End	Spring Break	Run	Spring End
60 psi	7,522	4,160	6,000	6,240	2,330	2,760
80 psi	9,500	5,110	6,432	7,800	3,600	4,200

2R3500SR

	Air Break	Run	Air End	Spring Break	Run	Spring End
60 psi	15,000	8,200	12,000	12,400	4,600	5,410
80 psi	19,000	10,200	12,800	15,600	7,200	8,400

NOTES:
- *2R2500 and 2R3500 are scotch yoke design*
- *Consult factory for 2R2500DAR and 2R3500DAR (reverse acting) torques.*

DIMENSIONS
TR10-2R1750

TRIAC

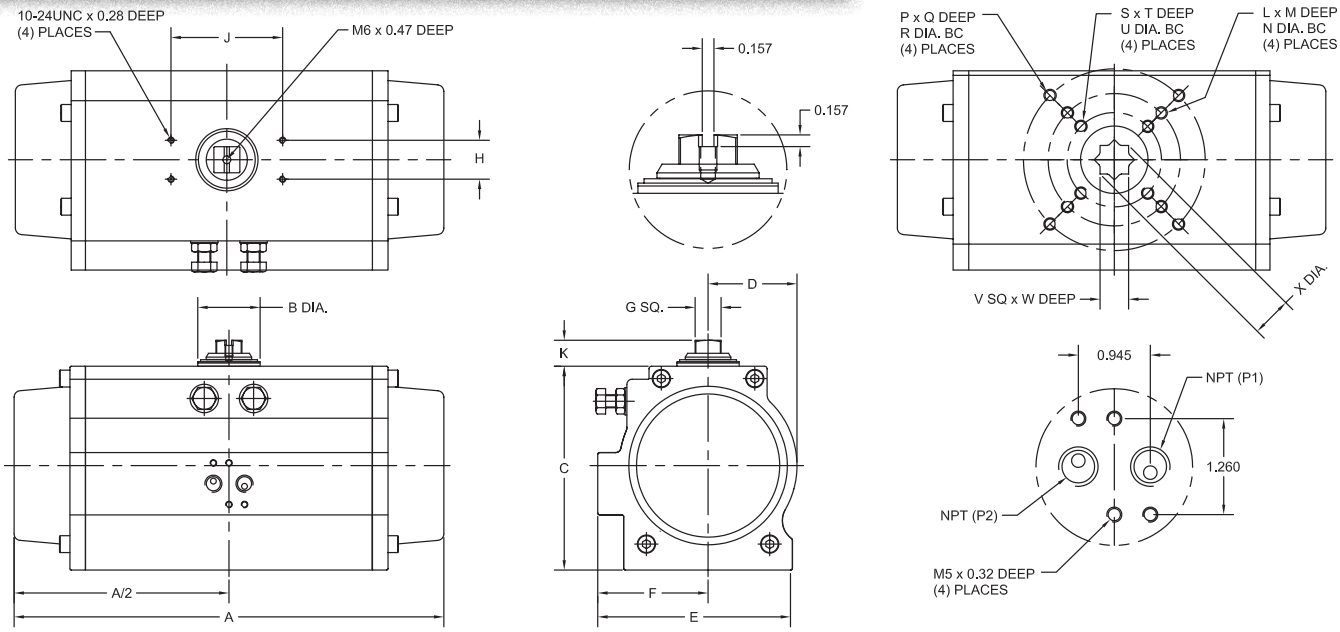

Model	TR10	TR20	2R40	2R80	2R130	2R200	2R300	2R500	2R850	2R1200	2R1750
A	4.57	5.98 / 7.60	7.95	9.29	10.87	11.46	13.90	15.16	20.95	22.68	24.37
B dia.	0.79	1.22	1.22	1.22	1.42	1.61	1.89	2.09	2.40	2.68	2.91
C	1.91	2.76	3.43	4.49	4.88	5.28	6.18	6.93	8.31	9.17	10.12
D	0.83	1.10	1.42	1.69	2.11	2.30	2.70	2.99	3.74	4.13	4.57
E	1.93	2.58	3.29	4.41	4.69	5.06	5.91	6.50	6.89	7.60	8.31
F	1.10	1.40	1.79	2.48	2.72	2.89	3.35	3.70	3.90	4.29	4.72
NPT	1/8″	1/8″	1/8″	1/4″	1/4″	1/4″	1/4″	1/4″	1/4″	1/4″	1/4″
ACCESSORY MOUNTING DIMENSIONS											
G sq.	0.354	0.630	0.630	0.630	0.630	0.630	0.787	0.787	0.787	1.260	1.260
H	0.984	1.181	1.181	1.181	1.181	1.181	1.181	1.181	1.181	1.181	1.181
J	1.969	3.150	3.150	3.150	3.150	3.150	3.150	5.118	5.118	5.118	5.118
K	0.787	0.787	0.787	0.787	0.787	0.787	0.787	1.181	1.181	1.181	1.181
VALVE MOUNTING DIMENSIONS											
ISO 5211	F03	F04	F05 / F07	F05/F07/F10	F07 / F10	F07 / F10	F07/F10/F12	F10 / F12	F10 / F12	F14	F14
U dia.	1.417	1.654	1.969	1.969	N/A	N/A	2.756	N/A	N/A	N/A	N/A
N dia.	N/A	N/A	2.756	2.756	2.756	2.756	4.016	4.016	4.016	N/A	N/A
R dia.	N/A	N/A	N/A	4.016	4.016	4.016	4.921	4.921	4.921	5.512	5.512
S	10-24	1/4″-20	1/4″-20	1/4″-20	N/A	N/A	5/16″-18	N/A	N/A	N/A	N/A
L	N/A	N/A	5/16″-18	5/16″-18	5/16″-18	5/16″-18	3/8″-16	3/8″-16	3/8″-16	N/A	N/A
P	N/A	N/A	N/A	3/8″-16	3/8″-16	3/8″-16	1/2″-13	1/2″-13	1/2″-13	5/8″-11	5/8″-11
T	0.24	0.31	0.39	0.39	N/A	N/A	0.47	N/A	N/A	N/A	N/A
M	N/A	N/A	0.47	0.47	0.47	0.47	0.63	0.63	0.63	N/A	N/A
Q	N/A	N/A	N/A	0.63	0.63	0.63	0.79	0.79	0.79	0.87	0.87
V sq.	0.354	0.433	0.551	0.748	0.748	0.748	0.866	1.063	1.063	1.417	1.417
W	0.39	0.63	0.67	0.71	0.71	0.71	1.02	1.18	1.18	1.58	1.58
X	0.46	0.58	0.75	1.02	1.02	1.02	1.19	1.47	1.47	1.97	1.97
WEIGHT (lbs.)											
DA	2.2	2.9	4.5	9	12	14.5	23	32	59	78	100
SR	N/A	3.5	6	11	14	17	26	38	68	91	117
VOLUME (cubic inches per 90°)											
CW	3	8	16.5	34	52	67	116	183	334	505	703
CCW	3	6	14	23	36	49	100	137	259	357	439
CYCLE TIMES (seconds per 90°)											
DA	0.3	0.5	0.6	1	1.2	1.5	2	2.5	3	4	5
SR	N/A	0.5	0.6	1	1.2	1.5	2	2.5	3	4	5

TR10 & TR20 have travel stops located in the End Caps for travel adjustment in one direction. 2R40 & 2R80 have travel stops on the opposite side as shown.

Direct Acting:
Pressure at port P1 will result in a clockwise rotation
Pressure at port P2 will result in a counter clockwise rotation

Reverse Acting:
Pressure at port P1 will result in a counter clockwise rotation
Pressure at port P2 will result in a clockwise rotation

$$\text{Air Consumption (scf per 90 Deg)} = \frac{\text{Volume}}{1{,}728} \times \frac{\text{Supply Pressure} + 14.7}{14.7}$$

NOTES: Accessory mounting holes are not intended for Manual Gear Overrides or Stop Blocks. Cycle times are under no load conditions. Air line size, air capacity, and valve torque characteristics affect these cycle times. Faster or slower cycle times can be accomplished using special control components.

DIMENSIONS
2R2500-2R3500

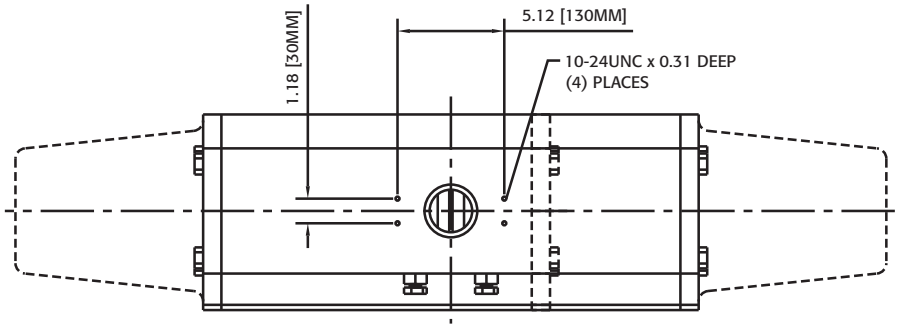

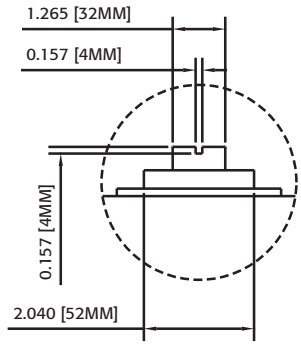

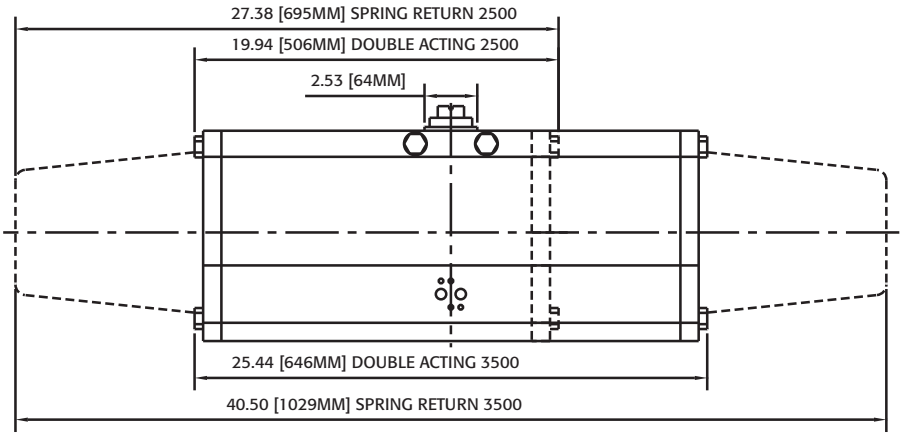

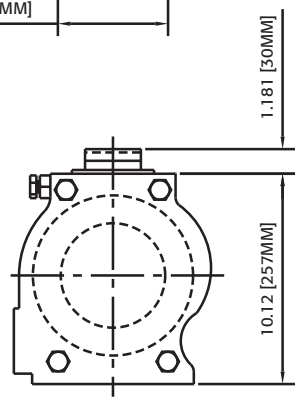

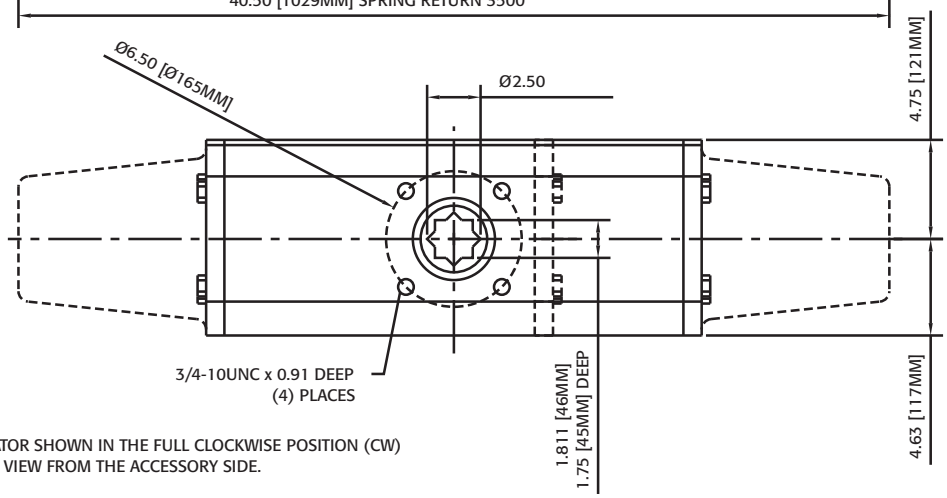

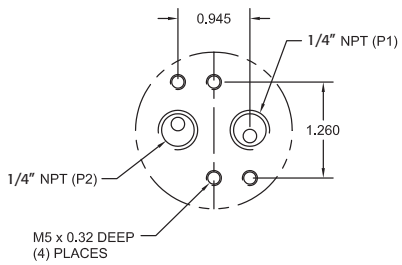

ACTUATOR SHOWN IN THE FULL CLOCKWISE POSITION (CW)
WHEN VIEW FROM THE ACCESSORY SIDE.

	WEIGHT (POUNDS)		VOLUME (CU. IN. PER 90 DEG)		CYCLE TIMES (SEC. PER 90 DEG)	
MODEL	DA	SR	CW	CCW	CW	CCW
2R2500	98	137	525	310	5	5
2R3500	125	195	650	585	9	9

$$\textbf{Air Consumption (scf per 90 Deg)} = \frac{\textbf{Volume}}{\textbf{1,728}} \times \frac{\textbf{Supply Pressure + 14.7}}{\textbf{14.7}}$$

NOTES: Accessory mounting holes are not intended for Manual Gear Overrides or Stop Blocks.
Cycle times are under no load conditions. Air line size, air capacity, and valve torque characteristics affect these cycle times. Faster or slower cycle times can be accomplished using special control components.

DIRECT MOUNT FOR BUTTERFLY VALVES

TRIAC

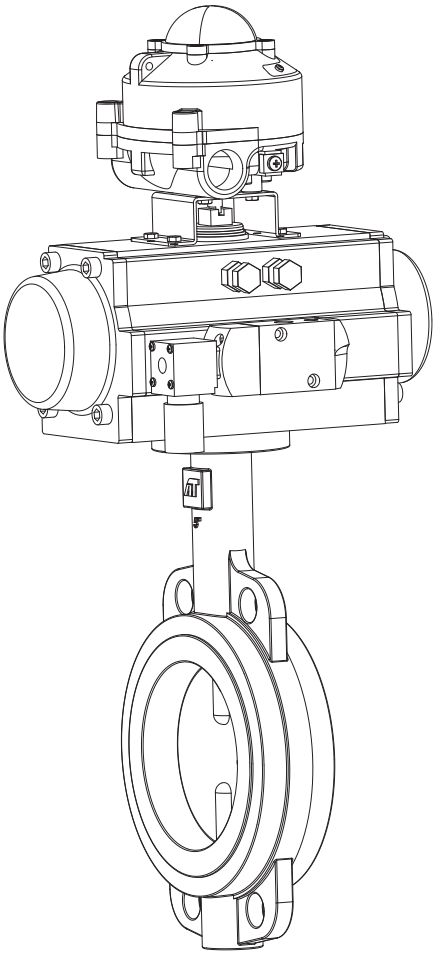

- Available for many of the most popular resilient seated butterfly valves
- Call for details and availability
- Usually requires no additional hardware
- Lower profile packages
- Wide base accommodates pattern without transition plate

TRIAC actuators feature a wide base to enable direct mounting to many butterfly valves without transition plates. Contact factory for compatibility with your particular butterfly valve or see A-T Controls' complete line of resilient and high performance butterfly valves.

Dimensions – 2K Series

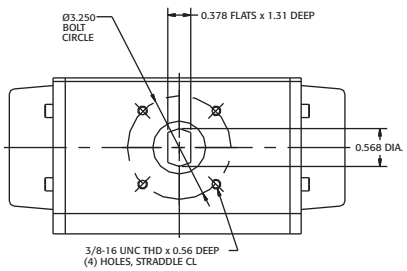

2K40

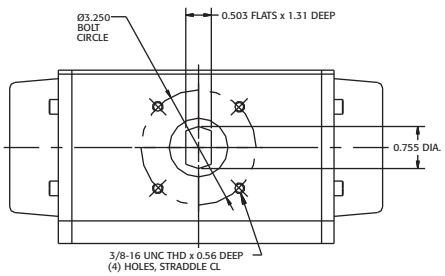

2K80 - 2K200

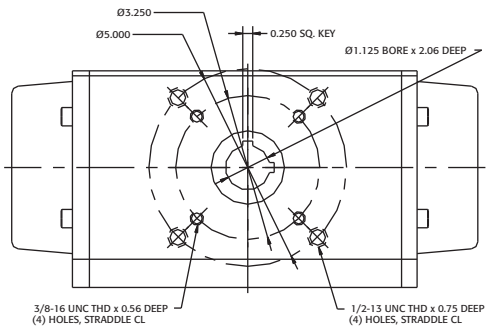

2K300 - 2K1200

Note: 2K850 and 2K1200 have only 5" bolt circle

Adapter Dimensions for 2K Series

Refer to valve dimensions for actual sizing

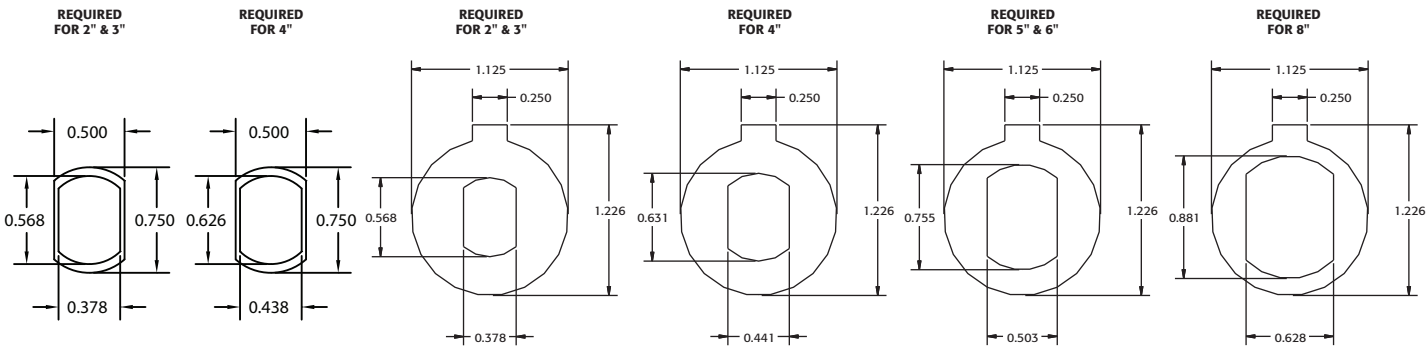

PART #TKA-010 **PART #TKA-012** **PART #TKA-020** **PART #TKA-030** **PART #TKA-040** **PART #TKA-050**

Other inserts are available on request.

DIRECT MOUNT ACTUATORS FOR CENTERLINE BUTTERFLY VALVES

TRIAC

Note:
» The 2CI Series actuators have five springs per side.
» The final number(s) in the 2CI model numbers refers to the size of the Butterfly Valve body for mounting.

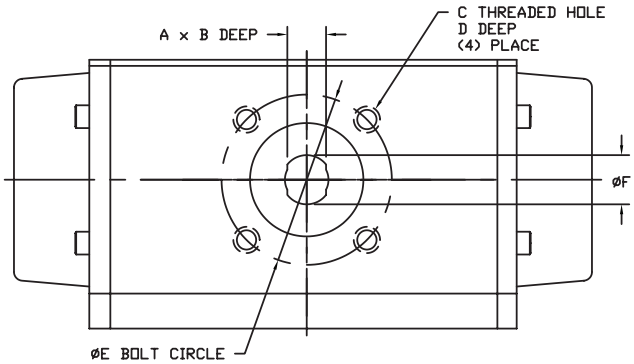

DOUBLE ACTING MODEL	SPRING RETURN MODEL	A	B	C	D	E	F
2CI40DA/2-3	2CI40SR/2-3	0.394	1.31	5/16-18	0.47	2.756	0.50
2CI80DA/2-3	2CI80SR/2-3	0.394	1.31	5/16-18	0.47	2.756	0.50
2CI80DA/4	2CI80SR/4	0.472	1.31	5/16-18	0.47	2.756	0.63
2CI80DA/5-6	2CI80SR/5-6	0.551	1.31	5/16-18	0.47	2.756	0.75
2CI130DA/2-6	2CI130SR/2-6	0.394	1.31	5/16-18	0.47	2.756	0.50
2CI130DA/4	2CI130SR/4	0.472	1.31	5/16-18	0.47	2.756	0.63
2CI130DA/5-6	2CI130SR/5-6	0.551	1.31	5/16-18	0.47	2.756	0.75
2CI200DA/4	2CI200SR/4	0.472	1.31	5/16-18	0.47	2.756	0.63
2CI200DA/5-6	2CI200SR/5-6	0.551	1.31	5/16-18	0.47	2.756	0.75
2CI300DA/5-6	2CI300SR/5-6	0.551	1.31	5/16-18	0.47	2.756	0.75
2CI300DA/8	2CI300SR/8	0.669	1.81	3/8-16	0.63	4.016	0.88
2CI300DA/10	2CI300SR/10	0.866	1.81	3/8-16	0.63	4.016	1.13
2CI500DA/8	2CI500SR/8	0.669	1.81	3/8-16	0.63	4.016	0.88
2CI500DA/10	2CI500SR/10	0.866	1.81	3/8-16	0.63	4.016	1.13
2CI500DA/12-14	2CI500SR/12-14	0.945	1.81	3/8-16	0.63	4.016	1.25
2CI850DA/8	2CI850SR/8	0.669	1.81	3/8-16	0.63	4.016	0.88
2CI850DA/10	2CI850SR/10	0.866	1.81	3/8-16	0.63	4.016	1.13
2CI850DA/12-14	2CI850SR/12-14	0.945	1.81	3/8-16	0.63	4.016	1.25
2CI1200DA/10	2CI1200SR/10	0.866	1.81	3/8-16	0.63	4.016	1.13
2CI1200DA/12-14	2CI1200SR/12-14	0.945	1.81	3/8-16	0.63	4.016	1.25

Inserts for use with 2R Series Actuators

(Refer to V sq. dimension on page 6)

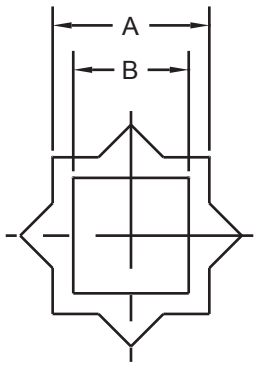

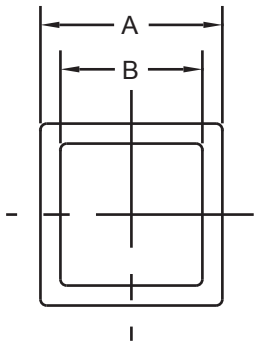

STAR INSERTS	A	B
ATD11T09	0.433	0.354
ATD14T09	0.551	0.354
ATD14T11	0.551	0.433
ATD17T11	0.669	0.433
ATD19T09	0.748	0.354
ATD19T11	0.748	0.433
ATD19T14	0.748	0.551
ATD19T17	0.748	0.669
ATD22T14	0.866	0.551
ATD27T17	1.063	0.669
ATD27T22	1.063	0.866

SQUARE INSERTS	A	B
C13706 (14mm-9mm)	0.551	0.354
C14352 (17mm-14mm)	0.669	0.551
C14700 (22mm-11mm)	0.866	0.433
C11251 (22mm-17mm)	0.866	0.669
ATE22T19	0.866	0.748
C17394 (27mm-11mm)	1.063	0.433
C17012 (27mm-14mm)	1.063	0.551
C15186 (27mm-19mm)	1.063	0.748
C17291 (27mm-22mm)	1.063	0.866
C17011 (36mm-17mm)	1.417	0.669
C17013 (36mm-19mm)	1.417	0.748
C13116 (36mm-27mm)	1.417	1.063

Solenoid Valves

- Direct mount TVC series
- Nipple mount available
- Weatherproof/explosion proof construction
- Intrinsically safe coil available
- Various voltages - AC or DC
- Quick exhaust modification
- 2 or 3 position control
- Exhaust speed controls

TVCS-X411-4N
Direct Mount Solenoids
All Accessory Options Available

APL Limit Switches

- Aluminum or Stainless Steel housing
- Weatherproof/explosion proof construction
- Dome indicator
- Easy-Set cams
- Captive bolts
- Many switch options
- AS-I systems
- Can be mounted on manual valves

APL-910N
Stainless Steel
Type 4X, IP 67

APL-310N
CSA Approved,
Type 4X

APL-510N
CSA Approved
Class I, Div 1 & 2, Groups B, C, D

APL-210N
CSA Approved, Type 4X

See brochure for details & options

Other Pneumatic Actuators

See stainless steel actuator brochure for detailed information.

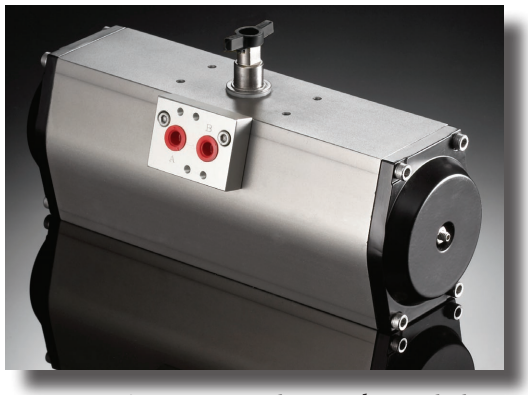

See 180° Pneumatic Rack & Pinion brochure for details.

Positioners

PPR, EPR & SS "Smart" Series

Declutchable Gear Overrides

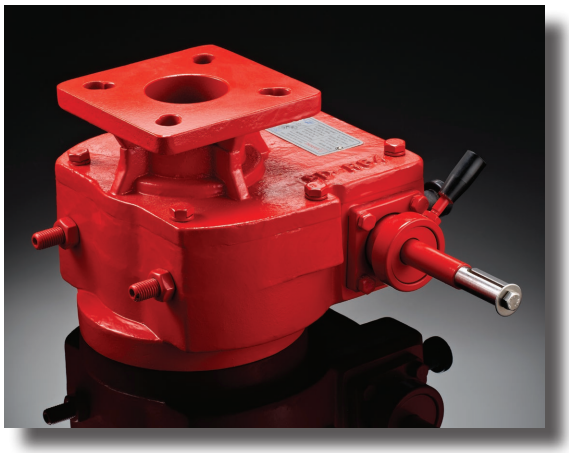

2R, 2C, and 2K DGO SERIES

Other Accessories and Controls

- Lock-up valves
- Filter regulators
- Special tubing/fittings
- Lockout/tagout hardware
- Flow controls
- Speed controls
- Custom assemblies
- Dribble control
- Specials
- Complete mounting and assembly service

Sample Specification

Actuators shall be of rugged pneumatic Rack & Pinion Design. Actuator body should be hard anodized to promote long cycle life and corrosion resistance. The actuator body should incorporate a heavy duty, ISO 5211 valve mounting pad with multiple ISO FO bolt circles for ease of mounting. Actuator internals should include dual aluminum pistons for a balanced torque load and a one-piece plated blow-out proof pinion for operator safety. Actuator drive pinions should incorporate significant body housing bearings with heavy duty O-Ring seals to promote high cycle life. The unit should have a dual travel stop feature, with a minimum of 5° of stroke adjustment on both ends of travel, to accommodate numerous valve and damper designs. All actuator fasteners and hardware should be stainless steel for corrosion resistance. The rack & pinion actuator line should be offered in a broad range of torque outputs. The actuator of choice should be A-T Controls (TRIAC®) TR/2R Series Rack & Pinions.

TRIAC Model Number Matrix

2 Triac Rack & Pinion Actuator with double travel stops
T Triac Rack & Pinion Actuator with single travel stop (TR10DA, TR20DA, TR20SA only)

- **R** ISO / DIN mounting configuration
- **CI** Direct mount to Centerline BFV**
- **K** Direct mount to Keystone / ABZ / Ultraflow BFV
- **N** Direct mount to Nibco BFV (special order: CF)
- **D** Direct mount to Demco BFV (special order: CF)

  Note: Others available, call for details

  - **0000** Actuator size (10, 20, 40, 80, 130, 200, 300, 500, 850, 1200, 1750, 2500, 3500)
    - **DA** Double acting configuration
    - **DAR** Double acting (reverse acting) configuration
    - **SR** Spring return fail clockwise configuration
    - **SO** Spring return fail counter-clockwise configuration
      - **Blank** Standard Buna seals (-5˚F to 175˚F)
      - **V** Viton® seals (0˚F to 300˚F)
      - **LT** Low temperature Silicone seals (-45°F to 175°F)
        - **Blank** 5 springs per side (SR & SO only) (See pg 9 for 2CI model numbers)
        - **0** Specify number of springs per side (1-6) (SR & SO only) (See pg 9 for 2CI model numbers)
          - **E** Extra long travel stops

Example: 2R80SRE (TRIAC Model 80 Rack & Pinion Actuator with Travel Stop in both directions, Spring Return fail clockwise, with Extra long travel stops)

**Note: When ordering a 2CI actuator, please specify the valve size per the 2CI model numbers on page 9.

Viton® is a registered trademark of E.I. DuPont de Nemours.

Dual Travel Stop Adjustment

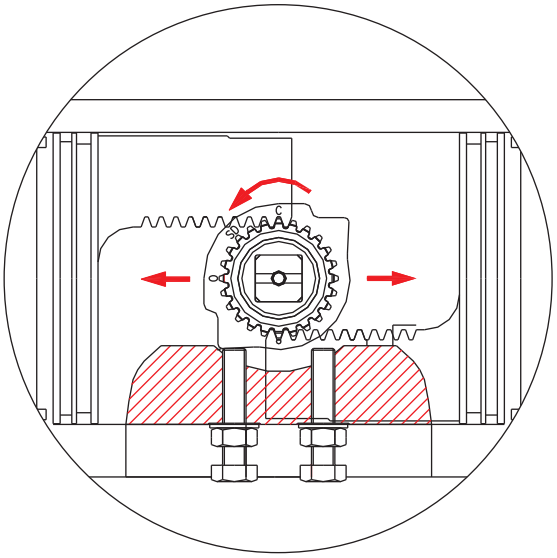

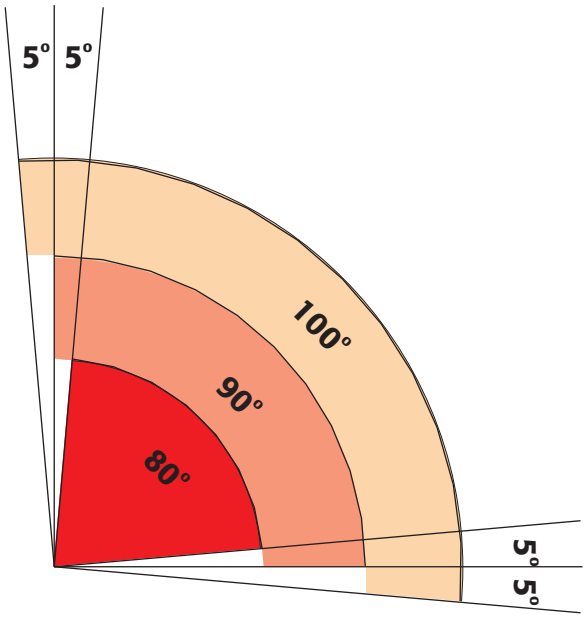

Triac 2R Series features a splined stop collar that provides travel stop adjustments in both the clockwise and counter-clockwise directions. The splined collar ensures minimal hysteresis and repeatable stop positions.

Support

Engineering assistance and 2D & 3D model drawings available

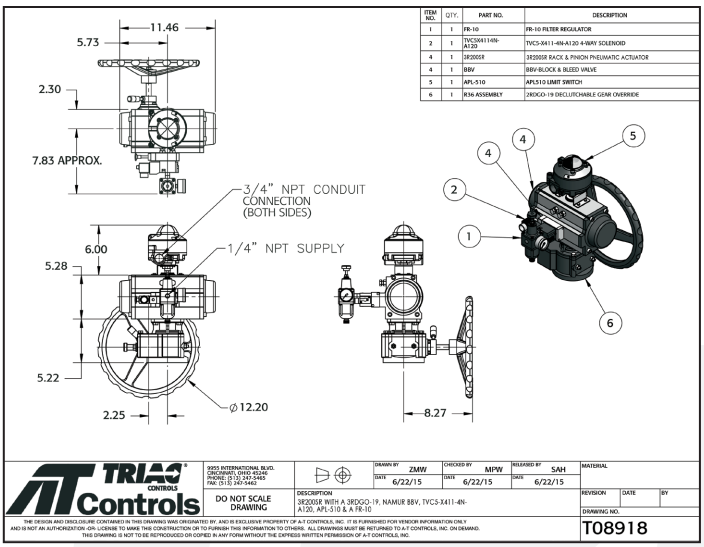

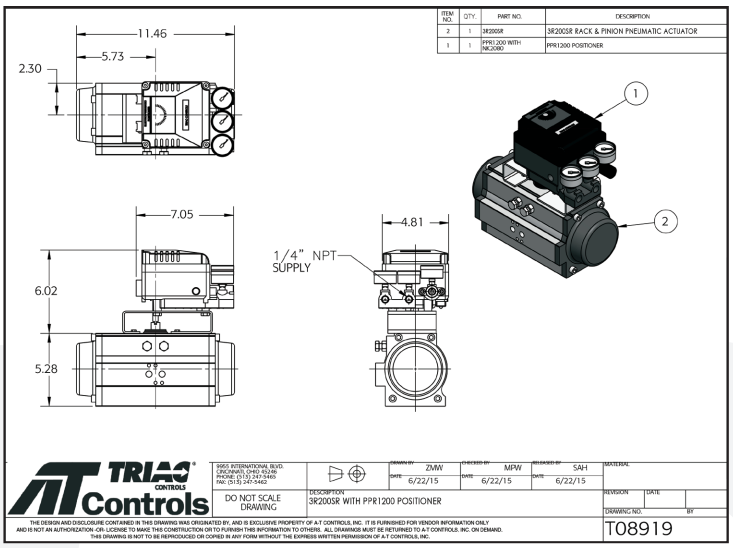

EXPLODED VIEW AND BILL OF MATERIAL

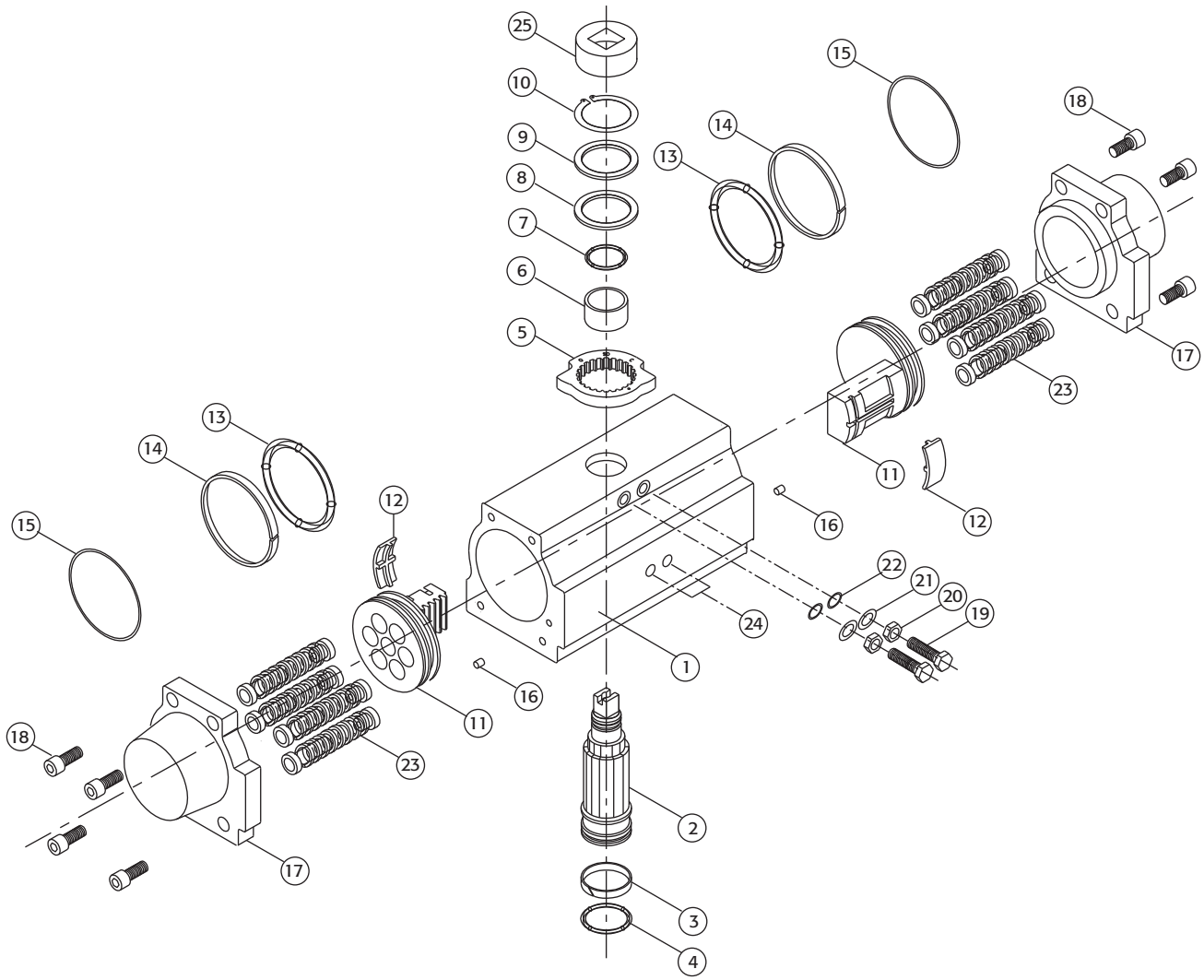

No.	Description	Qty.	Material	Remarks
1	Cylinder Body	1	Aluminum	Hard Anodized
2	Pinion	1	Steel	Zinc Plated
3	Bottom Pinion Bushing ①②	1	Nylon	
4	Bottom Pinion O-ring ①②	1	Nitrile Buna	
5	Travel Stop Cam	1	SCM21	Phosphate Coated
6	Top Pinion Bushing ①②	1	Nylon	
7	Top Pinion O-ring ①②③	1	Nitrile Buna	
8	Pinion Teflon Washer ①②	1	RTFE	
9	Pinion SST Washer ①②	1	304 Stainless Steel	
10	Snap Ring ①②	1	Steel	Zinc Plated
11	Piston	2	Die Cast Aluminum	Dichromate Dipped
12	Guide Plate ①②	2	Nylon	
13	Piston O-ring ①②③	2	Nitrile Buna	
14	Piston Guide Band ①②	2	PTFE	
15	End Cap O-ring ①②③	2	Nitrile Buna	
16	Hole Sealant	2	Nitrile Buna	
17	End Cap	2	Die Cast Aluminum	Epoxy Coated
18	End Cap Bolt	2	304 Stainless Steel	
19	Travel Stop Bolt	2	304 Stainless Steel	
20	Travel Stop Nut	2	304 Stainless Steel	
21	Travel Stop Washer	2	304 Stainless Steel	
22	Travel Stop O-ring ①②③	2	Nitrile Buna	
23	Spring Cartridge	12	Spring Steel	Epoxy Coated
24	Dust Plug	2	Polyethylene	
25	Position Indicator	1	Polyethylene	

① Recommended spare parts
② Parts included in a repair kit
③ Parts included in a seal kit

Repair Kit		
Nitrile Buna	2RKB(Actuator Size)	-5°F ~ +175°F
Viton	2RKV(Actuator Size)	0°F ~ +300°F
Low Temp Silicone	2RKLT(Actuator Size)	-45°F ~ +175°F

Example: 2RKB0130 = Nitrile Buna Repair Kit for 2R130

Seal Kit		
Nitrile Buna	2BOK(Actuator Size)	-5°F ~ +175°F
Viton	2VOK(Actuator Size)	0°F ~ +300°F
Low Temp Silicone	2LTOK(Actuator Size)	-45°F ~ +175°F

Example: 2VOK0080 = Viton Seal Kit for 2R80

ADDITIONAL A-T CONTROLS PRODUCTS

Electric Actuators

- Torques to 80,000 in-lbs
- Weatherproof enclosure
- ISO 5211 mounting kits
- On-off or modulating
- CSA approved
- Fail-Safe Electrics

Custom Mounting and Assembly Service

Heavy Duty Actuators

- Double Acting
- Spring Return
- Features stabilizer bar for longer cycle life
- Torques to 1,600,000 in-lbs
- Easy accessory mounting
- Symmetric & Canted Yoke

Manual Gear Operators & Overrides

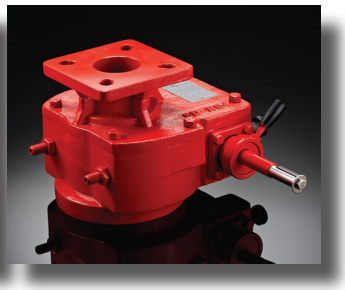

- Quarter turn and multi-turn
- Torques to 410,000 in-lbs
- Declutchable gear overrides
- ISO 5211 and other mounting
- Custom mounting available

Automated Valve Assemblies

- Pneumatic or Electric
- Pre-engineered assemblies
- Pre-sized and pre-priced
- Double Acting or Spring Return
- Multi-port valves
- Various End Connection
- Options
- 150#, 300# and 600# flanged
- Sanitary ends
- Firesafe valves and more
- Tank bottom valves
- Segmented Control Valves
- Butterfly Valve packages
- FM Approved Assemblies

Complete Valve Automation

See our website for IOM's & 3D models!

TRIAC

A-T Controls, Inc.

9955 International Blvd.
Cincinnati, Ohio 45246
PH (513) 247-5465
FAX (513) 247-5462
www.atcontrols.com

RP-20211026
Copyright 2013 A-T Controls, Inc.
LIT0004