TRIAC CONTROLS

Electric Actuators

AWWA C540-93

C US 201383 TYPE 4, 4X

SIL IEC 61508 / IEC 61511

WE Series Weatherproof
CSA Approved TYPE 4 & 4X IP67

KE Series
Weatherproof IP67

XE Series Explosion Proof
ATEX/IECEx Certified
Ex db IIB T4 Gb
Ex tb IIIC T135°C Db
IP67

Ex II 2 G II 2 D

IECEx

XC Series
CSA Explosion Proof
Class I, Division 1, Group C & D, T4
Ex d IIB T4 Gb
Class I, Zone 1, AEx d IIB T4 Gb

C US 258948 TYPE 4, 4X, 6 & 7

WE-350

The WE-350 Electric Actuator is specifically designed to operate small size ball valves (1″ and less) and other quarter-turn devices.

Features

- Compact and light weight
- High resistance to corrosion due to hard anodizing on inside and outside with polyester powder coating on external surface
- Multi-voltage (85-265VAC/1PH, 24VDC)
- Standard space heater (0.5W)
- Weather proof (IP67)
- Push Button and Manual lever
- Wide, easy mounting base standard to ISO 5211 (F03/F04/F05)
- (2) Operational & (2) Auxillary, Open / Close, SPDT, 6A 125/250VAC
- Captive cover bolts
- Mechanical position indicator & LED lamp indicators (Open/Close)

Construction

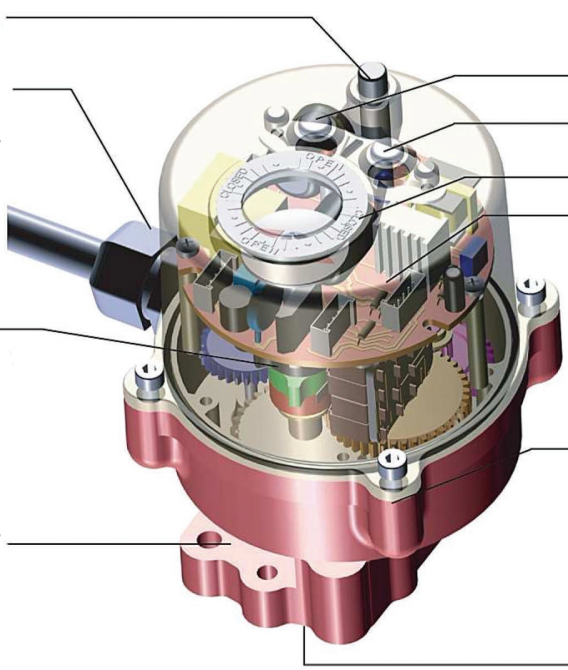

WE-350

ELECTRIC ACTUATORS

Performance

Type (Model)	Maximum Load Torque	Speed 60/50 Hz	Mounting Size	Supply Power & Rated Current (A) 60/50Hz, 1 Phase			Duty Cycle IEC34-1	Manual Lever Angle	Weight
	In-Lbs.	Sec/90°	ISO 5211	110VAC	220VAC	24VDC	S4		Lbs.
WE-350	354	12 sec.	F03/F04/F05	.12	.06	.46	70%	90°	2.65
WE-350HS	270	6.5 sec.		.065	.033	.25			

Dimensions

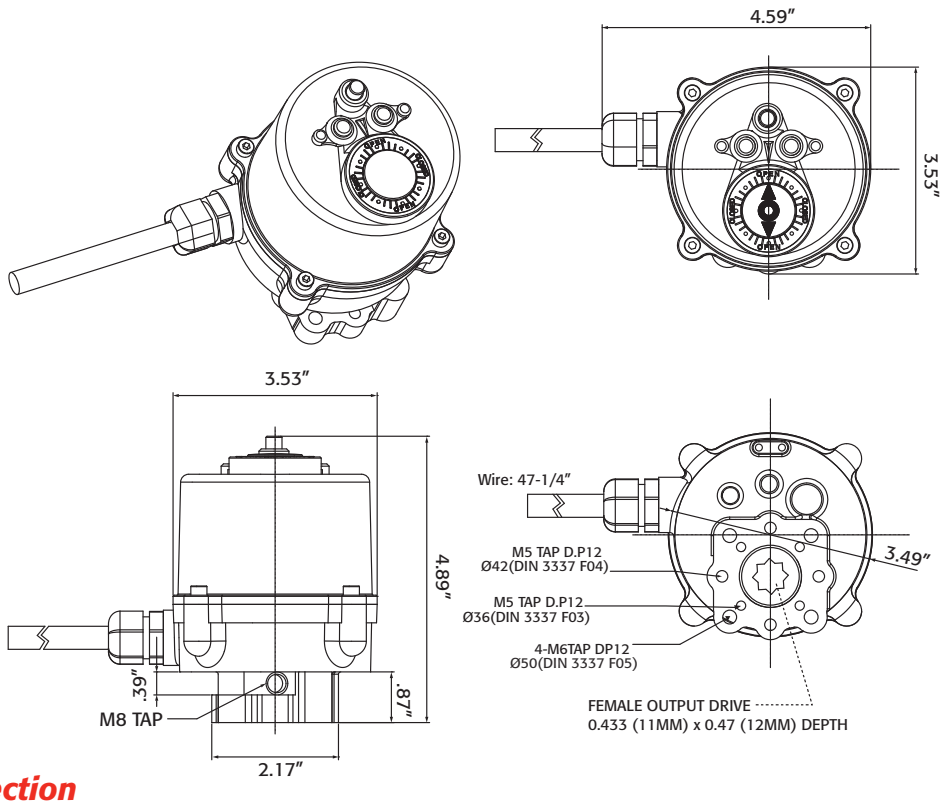

Wiring Connection

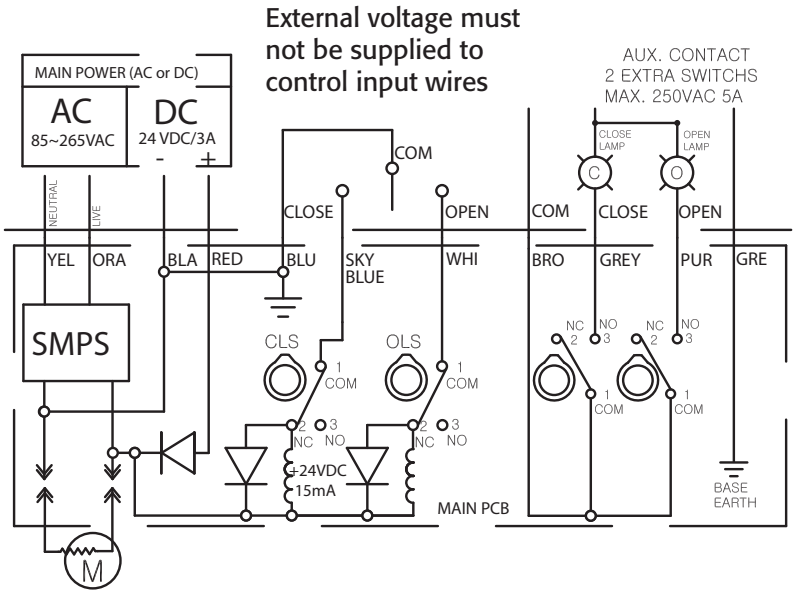

WE/XE-500

The WE-500 and XE-500 Electric Actuators have a compact design ideal for use with small ball valves (2" and less), and other quarter-turn devices. Each actuator includes a visual indicator, two auxiliary switches and a compartment heater. A convenient wrench manual override shaft is standard. This actuator is the clear choice when a compact, efficient electric actuator is required!

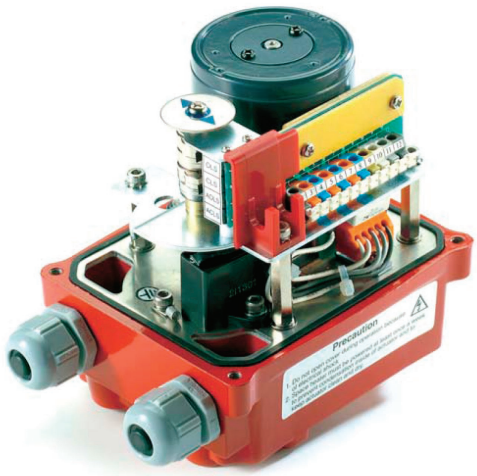

Standard Features

- Compact and light due to high grade aluminum alloy housing.
- High resistance to corrosion due to hard anodizing on inside and outside with polyester powder coating on external surface
- Output torque: 530 In-lbs.
- Reversible, high torque and low current motor
- Enclosure: Weatherproof (IP67, Type 4, 4X) or Explosion Proof (ATEX/IECEx Ex d IIB T4 Gb)
- Captive cover bolts
- Terminal block (11P)

Standard Specifications

Enclosure	Weatherproof (IP67, Type 4, 4X) or Explosion Proof (ATEX/IECEx Ex d IIB T4 Gb)
Power Supply	110/220V AC 1PH, 50/60Hz, ± 10%, 24V AC/DC
Duty cycle	IEC60034-1 S2 30 min.; S4 50-70%, 1200 starts per hour (average 50% rated torque at 25°C/77°F)
Motor	Class F Reversible motor
Limit switches	(2) Operational & (2) Auxillary, Open / Close, SPDT, 6A 125/250VAC
Space heater	2W Anti-condensation
Manual override	Drive Nut (4mm hex)
Cable conduit	Two 1/2" NPT
Movement angle	320° ±10°
Ambient temperature	-4°F - 158°F (optional -40°F Low Temp Kit)
External coating	Polyester powder coating
Mounting	ISO 5211 (F03/F05/F07)

Performance

Type (Model)	Maximum Load Torque	Speed 60/50 Hz	Motor Size	Full Load Amps			Locked Rotor Amps			Duty Cycle IEC 34-1	Number of Handle Turns	Weight
				AC 1PH. 50/60Hz		AC/DC	AC 1PH. 50/60Hz		AC/DC			
	In-Lbs.	Sec/90°	Watts	110V	220V	24V	110V	220V	24V	S4	N	Lbs.
WE-500	530	12/14	10	0.4	0.2	1.4	0.5	0.25	2.5	70%	8	6.61
XE-500												9.90

Optional Configurations

Position Indication Unit (Potentiometer kit)

High resolution potentiometer with precisely machined gearing directly engaged with drive shaft provides continuous monitoring of position of valve and actuator.

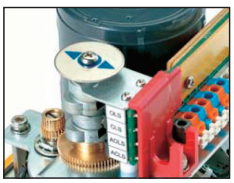

AC/DC 24V Control Unit

Dip Switch

Mode	1	2
DC	ON	OFF
AC	OFF	ON

(setting shown here applies to WE/XE-500A only)

TMC4 Electronic Control Card

- For WE Series only; See details on page 16

Dimensions

WE-500

CSA Approved,
Type 4 & 4X IP67

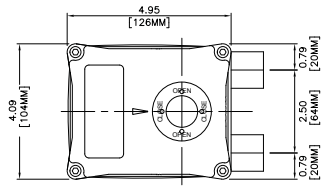

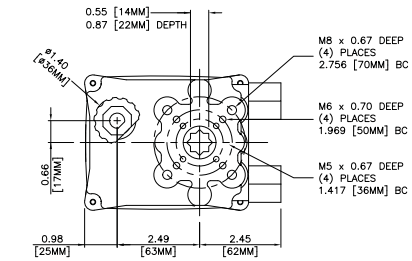

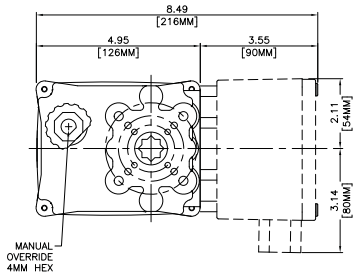

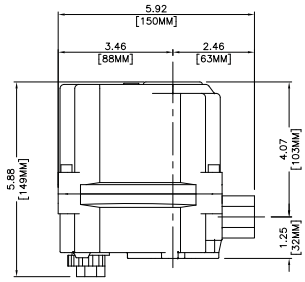

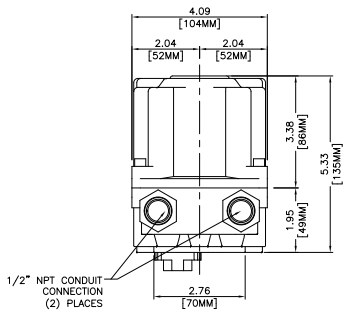

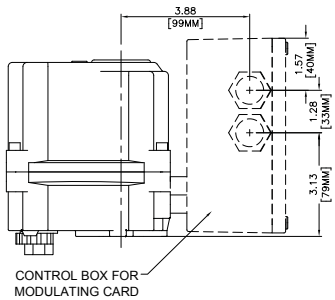

XE-500

ATEX/IECEx Ex d IIB T4 Gb, IP67

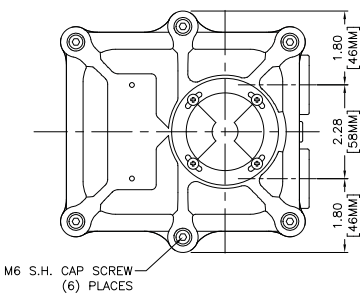

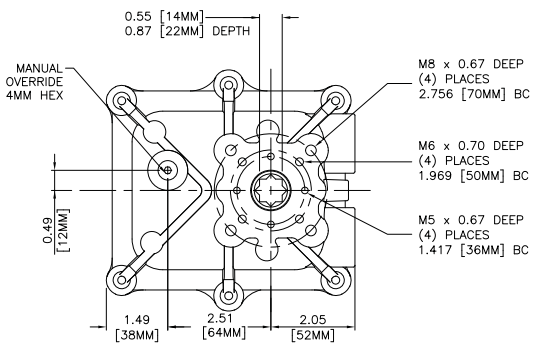

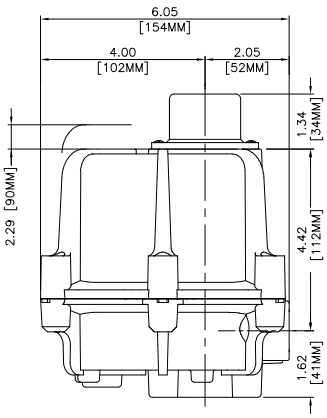

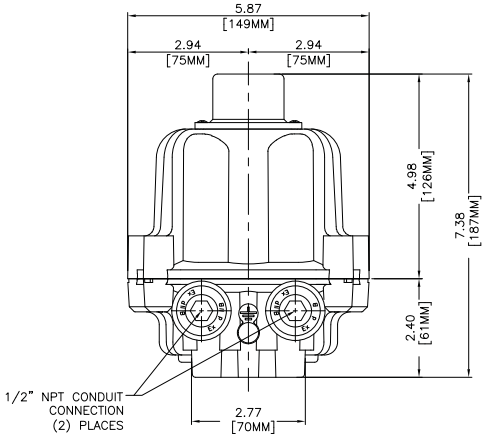

Electric Actuators WE/XE Features

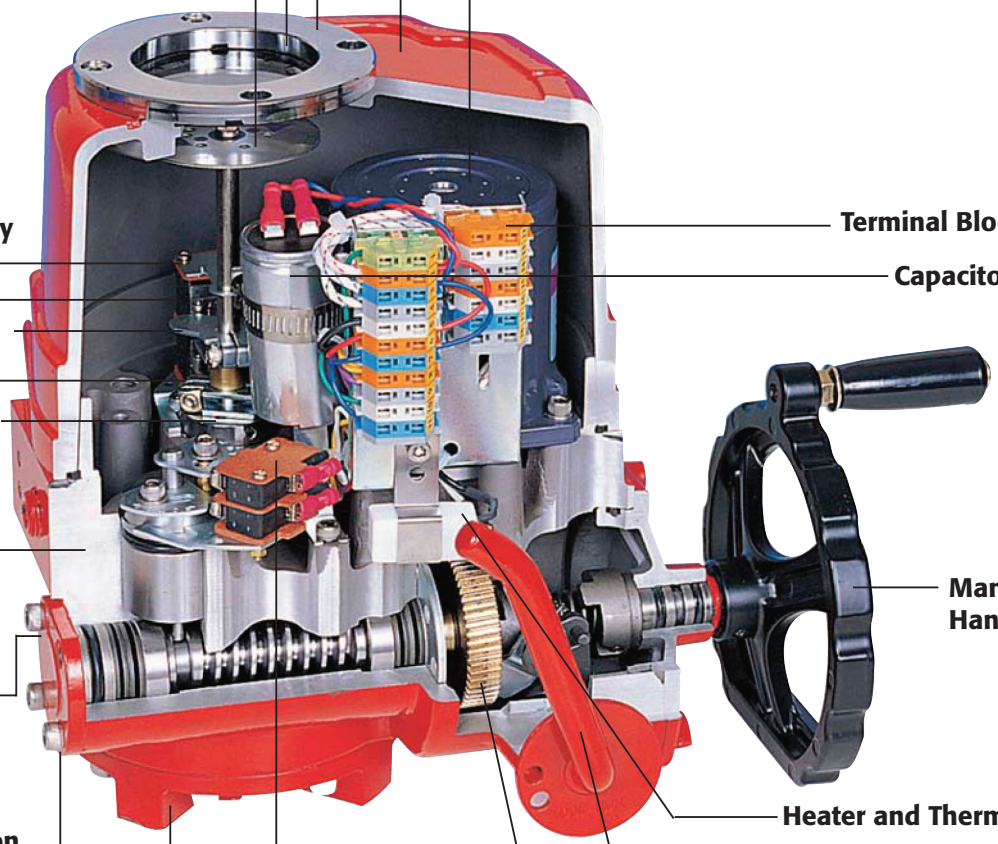

Window cover

Window

Position indicator
Option: illuminated red (close), green (open), yellow (over torque)

Actuator Cover
High corrosion-resistance due to anodizing on the inside and outside and polyester powder coating on the outside

Motor
Available in 1 Phase / 3 Phase, all motors are custom built for high-torque, low current draw and the highest duty cycle ratings offered. Fan Cooled Motor is standard on model WE/XE 690 and larger.

Limit Switch & Auxiliary Switch Set (standard)

Close Limit Switch (CLS)

Aux. Close Limit Switch (ACLS)

Open Limit Switch (OLS)

Aux. Open Limit Switch (AOLS)

Terminal Block

Capacitor

Actuator Body

Manual Handwheel

Mechanical Stops (rear side)

Heater and Thermostat

Dual Conduit Connection (rear side)

Manual Override

Torque Switch System (except WE/XE-690)

Easy Mounting Base
ISO 5211 standard

Double Reduction Worm Gear
Assembly is self-locking with minimum blacklash.

WE/XE-690 thru WE/XE-25900

Terminal block

- Extra terminals for customer's convenience
- Spring Loaded Terminal Strip provides secure connection

Heater

- Ceramic housing with thermostat to eliminate condensation (5-10 watt Standard)
- Optional High Wattage Heater for Low Temp applications to -40°F

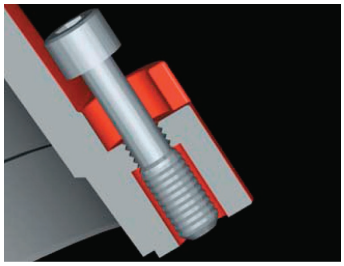

Captive cover bolt

- Cover bolts are specially designed to prevent loosening during maintenance or installation
- All external bolts are stainless steel for rust prevention

Indicator sustained by spring

- Direction of visual indicator is set by factory
- To change its direction, simply grip the indicator plate and rotate to the new position
- Spring beneath the indicator plate sustains the set position
- No need to loosen screw and tighten it again

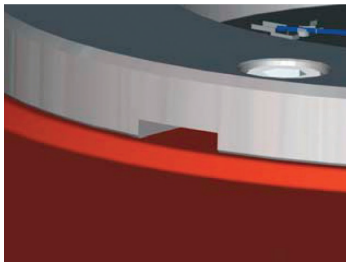

Slot on window cover for draining water

- A drain slot is provided to eliminate water buildup on window

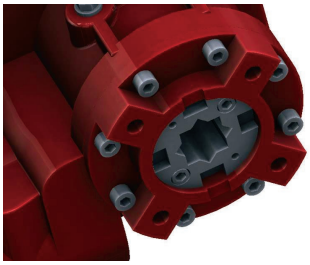

Removable Drive Bushing

- Easily changeable drive size

WE/XE Series

WE CSA Approved, Type 4 & 4X, IP67

XE
ATEX/IECEx
Ex db IIB T4 Gb
Ex tb IIIC T135°C Db
IP67

SE Type 4, 4X & 6, IP68

Acutator Models	Maximum Load Torque	Speed 60 / 50 Hz	Motor Size	Full Load Amps					Locked Rotor Amps					Duty Cycle	Handwheel Turns	Weight
				AC/DC	1 Phase		3 Phase		AC/DC	1 Phase		3 Phase				
WE / XE	In-Lbs.	Sec/90°	Watts	24V	110V/60Hz	220V/60Hz	380V	440V	24V	110V/60Hz	220V/60Hz	380V	440V	IEC 34-1 S4	N	Lbs.
-690	690	13 / 16	15	5	1.2	0.6	N/A	N/A	12.8	1.4	0.7	N/A	N/A	70%	10	16.4
-1350	1350	21 / 25	40	6	2	1	0.28	0.36	16.9	2.5	1.2	0.75	0.66	70%	11	36.7
-1700	1700	21 / 25	40	7.4	2.3	1.1	0.28	0.36	16.9	2.5	1.2	0.75	0.66	70%	11	36.7
-2640	2640	26 / 31	40	8.9	2.3	1.3	0.27	0.34	30.8	2.9	1.4	1	0.87	70%	13.5	48.6
-4400	4400	26 / 31	90	N/A	4.5	1.9	0.42	0.47	N/A	5	2.4	1.73	1.5	70%	13.5	50.8
-5200	5200	26 / 31	90	N/A	4.5	2	0.42	0.47	N/A	5	2.4	1.73	1.5	70%	13.5	50.8
-6900	6900	31 / 37	180	N/A	5.1	2.4	0.61	0.67	N/A	7.3	3.8	2.73	2.38	50%	16.5	64
-10500	10500	31 / 37	180	N/A	5.4	3.4	0.61	0.67	N/A	7.3	3.8	2.73	2.38	50%	16.5	64
-17500	17500	95 / 112	180	N/A	5.8	2.4	0.61	0.67	N/A	7.3	3.8	2.73	2.38	50%	49.5	167
-25900	25900	95 / 112	180	N/A	6.3	3.4	0.61	0.67	N/A	7.3	3.8	2.73	2.38	50%	49.5	167

Standard Specifications

Enclosure	**Series WE** - Weatherproof, CSA Type 4, 4X, IP67 **Series XE** - ATEX/IECEx Explosion/Flame Proof & Dust Ignition Proof; IP67, Ex db IIB T4 Gb, Ex tb IIIC T135°C Db **Series SE** - Submersible, Type 4, 4X, & 6, IP68, 10m for 72hr
AWWA	Conforms to AWWA C540-93 requirements
SIL	SIL2/SIL3 capable
Power supply	12/24VDC, 24/110/220VAC 1PH, 220/380/440/460/480VAC 3 PH, 50/60Hz, ±10%
Duty cycle	S2 30 min.; S4 50-70%, 1200 starts per hour; average 50% rated torque at 25°C/77°F
Motor	Class F Reversible Induction motor
Limit switches	Open / Close, SPDT, 16A 1/2HP 125/250VAC, 0.6A 125VDC, 0.3A 250VDC; (2) Operational & (2) Auxillary
Torque switches	Open / Close, SPDT, 16A 1/2HP 125/250VAC, 0.6A 125VDC, 0.3A 250VDC (except size -690)
Stall protection	Built-in thermal protection, Open 302°F (150°C) / Close 207°F (97°C)
Travel angle	0 to 90° ± 10° (Standard), 360° (Optional)
Indicator	Continuous position indicator
Manual override	Declutching mechanism
Self locking	Provided by double worm gearing
Mechanical stopper	Open / Close (external adjustable screws)
Space heater	Anti-condensation 5-10 W (Standard) 30-45 W (Low-Temp option)
Cable Conduit	Two 3/4" NPT
Lubrication	Grease moly (EP type)
Terminal block	Spring loaded lever push type
Materials	Steel, Aluminium alloy, Al bronze, Polycarbonate
Ambient temperature	Standard: -4°F — 158°F | Explosion Proof standard: -4°F — 140°F
Ambient humidity	90% RH Max. (non-condensing)
Anti-Vibration	XYZ 10g, 0.2~34Hz, 30 minutes
External coating	Anodizing treatment before dry powder, Polyester

Suitable for Safety Applications
SIL
IEC 61508 / IEC 61511

Options

Option	WE	XE	SE	Available Models
Explosion/Dust Ignition Proof Enclosure (ATEX/IECEx Ex db IIB T4 Gb; Ex tb IIIC T135°C Db, IP67)	-	X	-	-500 to -25900
Submersible Enclosure (Type 4, 4X & 6, IP68, 10m for 72hr)	-	-	X	-690 to -10500
Potentiometer Unit (1kΩ to 10kΩ)	X	X	X	-500 to -25900
TMC4 Electronic Control Card; 4-20mA, 0-10VDC, 0-5VDC, 0-135Ω, 0-1kΩ or discrete open/close command signal	X	X	X	WE-500 to -25900 XE/SE-1350 to -25900
(TDC) High Resolution Electronic Modulating Card; 4-20mA, 1-5VDC, 0-5VDC, 0-10VDC command signal	X	X	X	WE-500 to -25900 XE/SE-1350 to -25900
Local Control Unit (local/remote control)	X	-	-	-500 to -25900
Semi-Integral Control Unit (local/remote control with feedback)	X	X	X	-1350 to -25900
Intelligent Digital Control Unit (local/remote control with feedback and digital LCD display)	X	X	X	-1350 to -80000
Current Position Transmitter (4-20mA output)	X	X	X	-500 to -25900
Low Temp Kit (-40°F)	X	X	X	-500 to -25900
24V AC/DC Control	X	X	X	WE/XE-500A to -2640A SE-690A to -2640A
DC Motor (24VDC)	X	X	X	WE/XE-500C to -2640C SE-690C to -2640C
Rotation 120°, 180°, 270° (bidirectional), 360°(unidirectional)	X	X	X	-690 to -10500
Visual LED Indicator (open, close, power, torque)	X	X	X	-690 to -10500

Ex
II 2 G
II 2 D

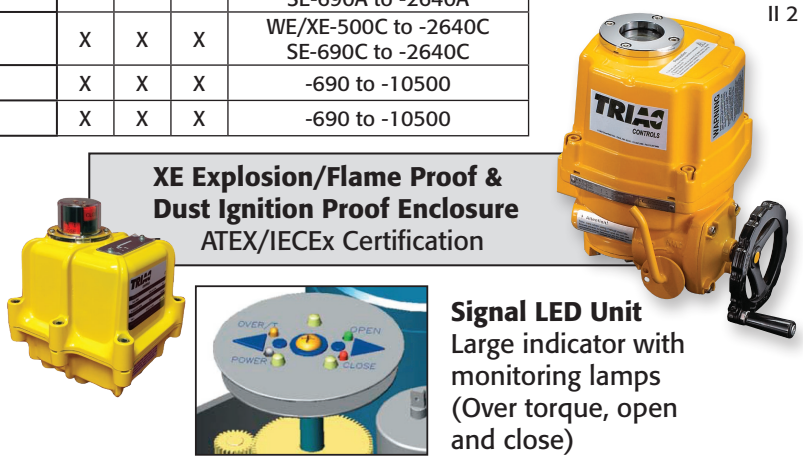

XE Explosion/Flame Proof & Dust Ignition Proof Enclosure
ATEX/IECEx Certification

Signal LED Unit
Large indicator with monitoring lamps (Over torque, open and close)

Enclosure Ratings

Series WE - Weatherproof, CSA Type 4, 4X, IP67
Series XE - ATEX/IECEx Explosion/Flame Proof & Dust Ignition Proof; IP67, Ex db IIB T4 Gb, Ex tb IIIC T135°C Db
Series SE - Submersible, Type 4, 4X, & 6, IP68, 10m for 72hr

Wiring Diagram References

Model	Description	Drawing
WE-500	115 VAC/1 Phase, Two Position	SE 1010
WE-500A	24 VAC/24 VDC, Two Position	SE 1168/SE 1130
WEM-500	115 VAC/1 Phase, Modulating with TMC4 Servo Card	SE01687
WE-690	115 VAC/1 Phase, Two Position	SE 1032
WEM-690	115 VAC/1 Phase, Modulating with TMC4 Servo Card	SE01689
WE/XE-1350 thru 25900	115 VAC/1 Phase, Two Position	SE 1080
WE/XE-1350A thru 2640A	24 VAC/24 VDC, Two Position	SE 1221/SE 1220
WEM/XEM-1350 thru 25900	115 VAC/1 Phase, Modulating with TMC4 Servo Card	SE01691
Digital Control Unit	3 Phase/Modulating	SE 1222
Digital Control Unit	3 Phase/Two Position	SE 1301
Semi-Integral Unit	1 Phase/Proportional	SE 1176
Semi-Integral Unit	1 Phase/Two Position	SE 1097

» See www.atcontrols.com to download specific wiring diagrams
(Download > Sort by Document Type > Electric Schematic)

High Speed Electric Actuators

Model	Output Torque (In-Lbs)	Speed (60Hz) (Sec/90°)	Torque Switch Setting (In-Lbs)
WE-690*HS2	290	4.5	N/A
WE-690*HS1	400	7.0	N/A
WE-1350*HS2	840	7.0	1,350
WE-1350*HS1	1,200	10.5	1,350
WE-2640*HS2	1,390	8.5	2,640
WE-2640*HS1	2,050	13.0	2,640
WE-4400*HS2	2,350	8.5	4,400
WE-4400*HS1	3,500	13.0	4,400
WE-6900*HS2	4,500	10.5	6,900
WE-10500*HS1	6,700	15.5	10,500
WE-17500*HS2	12,000	31.0	17,500
WE-25900*HS1	18,000	47.0	25,900

Motor specifications remain the same.
*Must specify voltage - see part number matrix

Control Options for WE-500 thru 25900

Control Cards

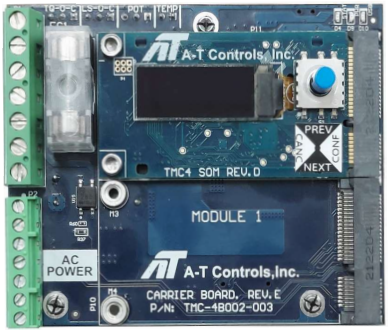

TMC4 Electronic Control Card (12VDC, 24VDC, 24VAC, 120VAC, 220VAC)

Standard Features:

- 4-20mA, 0-10VDC, 0-5VDC, Ohms, or Open/Close command signal
- Programmable fail mode on loss of command or out of range signal: In Place, Fail Close, Fail Open, Fail to Percent
- On board 4-20mA or 0-10V self-powered feedback transmitter
- Adjustable command and feedback to non-standard ranges
- LCD screen with easy to navigate UI for setup and configuration
- External brake control for spring return actuators (excluding with 24VAC supply)
- Expansion module slot for communication protocol options: Modbus RTU, Modbus TCP, Profibus DP, Ethernet/IP
- Adjustable deadband setting down to 0.2%
- Direct/Reverse action setup by zero & span
- +24VDC output for powering external 2-wire transmitters

Optional Features:

- Communication protocols: Modbus RTU, Modbus TCP, Profibus DP, Ethernet I/P (consult factory for other protocols)
- Motor temperature management programmable fail positions on loss of command signal: Fail in Place, Fail CW, Fail CCW, Fail % Value
- Power monitor for AC operation

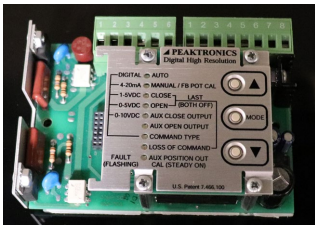

TDC Electronic Modulating Card (12/24VDC, 24/120/220 VAC)

- 450 Point Resolution, 16 Bit Micro Processor
- Adaptive Control Feature (continuously adjusts for load and actuator conditions and positions to ±0.1°)
- Dynamic Breaking
- 4-20mA, 1-5V, 0-5V, 0-10V
- Programmed to Fail in place, Fail CW, or Fail CCW on loss of command signal
- 4-20mA Feedback Transmitter (Optional)

EPC Electronic AS-i Network Card

- AS-i Version 2.1
- 24VDC Power
- Emergency Override-Normal Operation is overridden when actuator is driven to either CW or CCW position on command
- Built in Emergency Position Command (EPC) overrides normal operation and automatically operates the valve into either the open or closed position (normally this is the closed position) as defined in the user specifications
- Signal Sentinel continuously monitors the EPC system offering additional failsafe backup in the event of an unexpected local event

Boiler Feedwater Application

- **WEL** Control signal 4-20mA, specify these parts: LRC-101, POT-102 & Extended Bracket.
- **WES** Control signal 0-135 ohm, specify these parts: TDC-100, XMA-108, POT-102 & Extended Bracket
- Logarithmically averages rapidly changing signals to reduce unneccessary hunting for position.

Options

Special Application

Local / Remote Control Unit

- Aluminum die-cast, compact size, light weight
- Weatherproof Type 4/4X, IP67
- 24V AC/DC, 120VAC, 220VAC
- Local/Remote, Open/Off/Close selector switches
- Full open/close position indicator lamps (Green = Open, Red = Close)
- Easy to add to WE series actuators

Intelligent Digital Control Unit

- Aluminum die-cast, compact size, integrated design
- Weatherproof Type 4/4X, IP67/IP68
- LCD screen: configurable menu settings, status indicators, open percentage number and bar graph
- Auto phase discriminator; detects phase reversal and angle
- Separate terminal chamber
- LED lamp indicators (Red = open/opening, Green = close/closing, Yellow = fault)
- Relay contact status feedback (remote, opening, closing, fault)
- Supply Voltage: 110/220VAC 1-phase, 50/60Hz, ±10% | 220 to 480VAC 3-phase, 50/60Hz, ±10%

Semi-Integral Control Unit

- Aluminum die-cast, compact size, integrated design
- Weatherproof Type 4/4X, IP67/IP68
- Phase protection monitor by LED in case of reverse wiring
- Relay contact status feedback (remote, opening, closing, fault)
- Supply Voltage: 110/220VAC 1-phase, 50/60Hz, ±10% | 220 to 480VAC 3-phase, 50/60Hz, ±10%

LED lamp signal		
White	○	:Power
Blue	●	:Remote
Yellow	●	:Fault
Red	●	:Open/Opening
Green	●	:Close/Closing

Dimensional Drawing

WE/XE-690, 1350, 1700, 2640, 4400, 5200, 6900, 10500

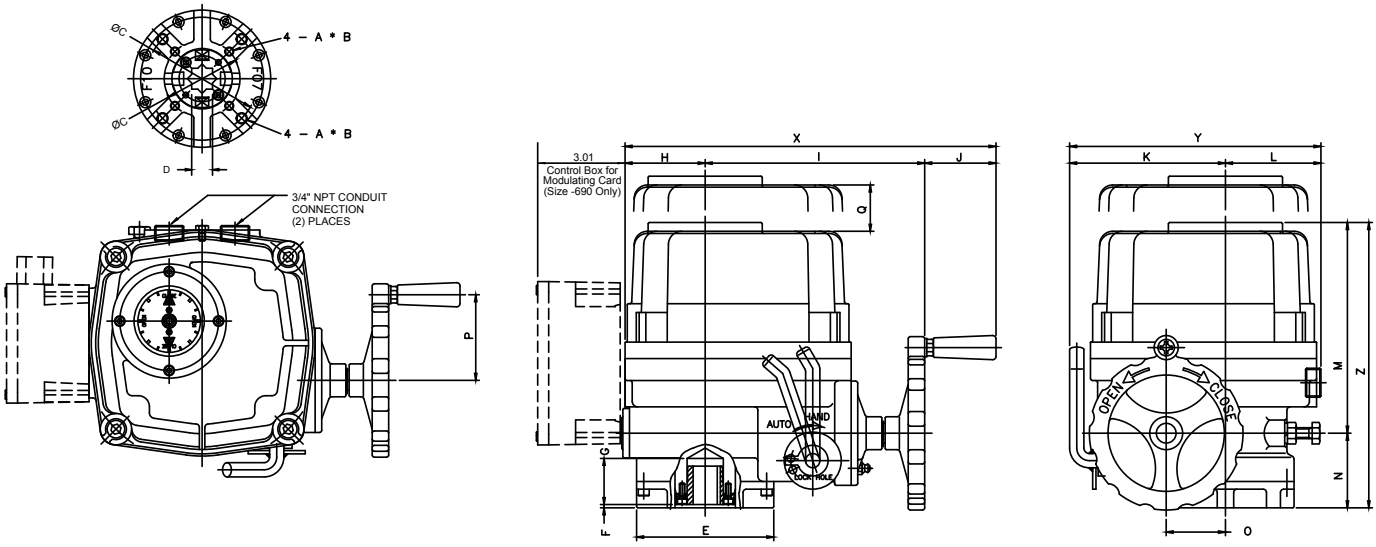

WE/XE-17500, 25900

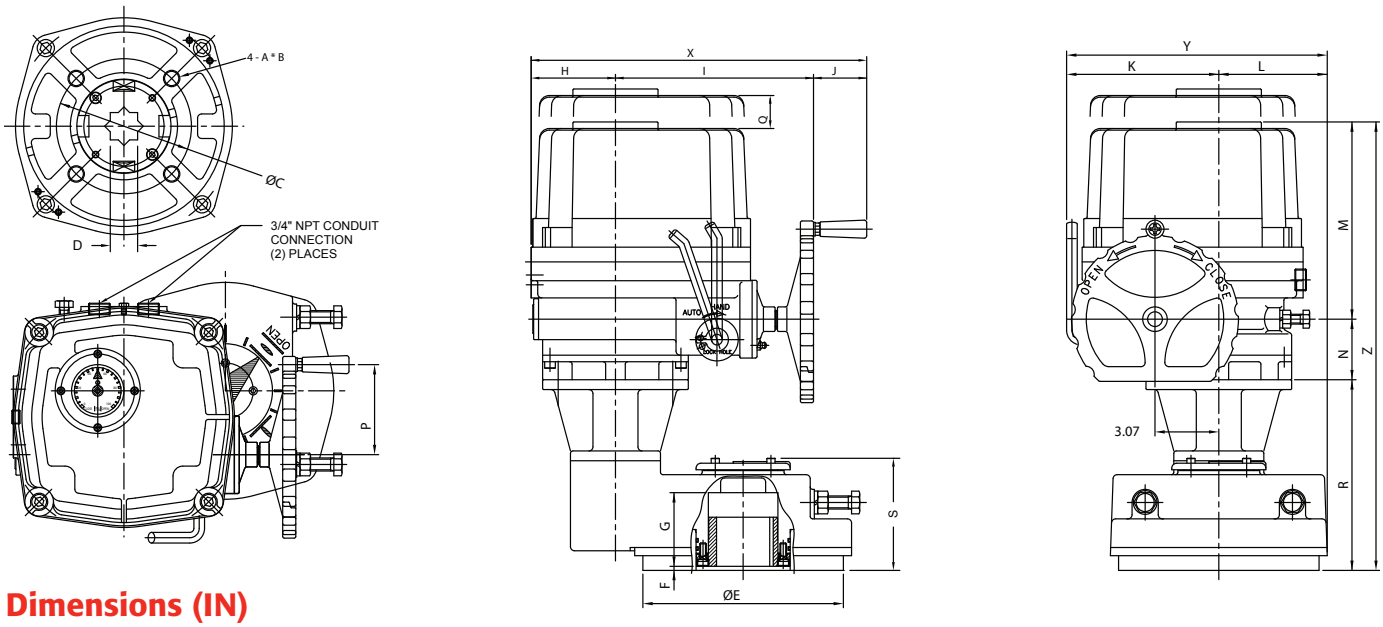

Dimensions (IN)

Model WE/XE	ISO 5211	A	B	C	D sq	E	F	G	H	I	J	K	L	M	N	O	P	Q	R	S	X	Y	Z
-690	F07	M8	0.47	2.756	0.669	3.46	0.12	1.26	1.97	6.18	2.01	3.94	2.76	6.57	2.09	1.57	2.36	4.72	-	-	10.16	6.69	9.25
-1350	F07/F10	M8/M10	0.47/0.59	2.756/4.016	0.748	4.92	0.12	1.65	2.87	7.87	2.56	5.59	3.43	7.56	2.68	2.13	3.07	6.30	-	-	13.31	9.02	10.55
-1700	F07/F10	M8/M10	0.47/0.59	2.756/4.016	0.748	4.92	0.12	1.65	2.87	7.87	2.56	5.59	3.43	7.56	2.68	2.13	3.07	6.30	-	-	13.31	9.02	10.55
-2640	F10/F12	M10/M12	0.59/0.71	4.016/4.921	1.063	5.83	0.12	1.93	3.23	8.70	2.56	6.30	3.90	8.70	2.72	2.56	3.07	7.09	-	-	14.49	10.20	11.42
-4400	F10/F12	M10/M12	0.59/0.71	4.016/4.921	1.063	5.83	0.12	1.93	3.23	8.70	2.56	6.30	3.90	8.70	2.72	2.56	3.07	7.09	-	-	14.49	10.20	11.97
-5200	F10/F12	M10/M12	0.59/0.71	4.016/4.921	1.063	5.83	0.12	1.93	3.23	8.70	2.56	6.30	3.90	8.70	2.72	2.56	3.07	7.09	-	-	14.49	10.20	11.97
-6900	F14	M16	0.95	5.512	1.417	7.01	0.12	2.24	4.06	9.53	2.56	7.32	4.37	9.49	2.91	3.07	4.33	8.27	-	-	16.14	11.69	12.99
-10500	F14	M16	0.95	5.512	1.417	7.01	0.12	2.24	4.06	9.53	2.56	7.32	4.37	9.49	2.91	3.07	4.33	8.27	-	-	16.14	11.69	12.99
-17500	F16	M20	1.18	6.496	1.417	9.65	0.20	3.54	4.06	9.53	2.56	7.32	5.24	9.49	2.91	3.07	4.33	8.27	9.17	5.24	16.14	12.56	22.17
-25900	F16	M20	1.18	6.496	1.417	9.65	0.20	3.54	4.06	9.53	2.56	7.32	5.24	9.49	2.91	3.07	4.33	8.27	9.17	5.24	16.14	12.56	22.17

Dimensional Drawing

WE-1350, 1700, 2640, 4400, 5200, 6900, 10500 *Intelligent Digital Control Unit*

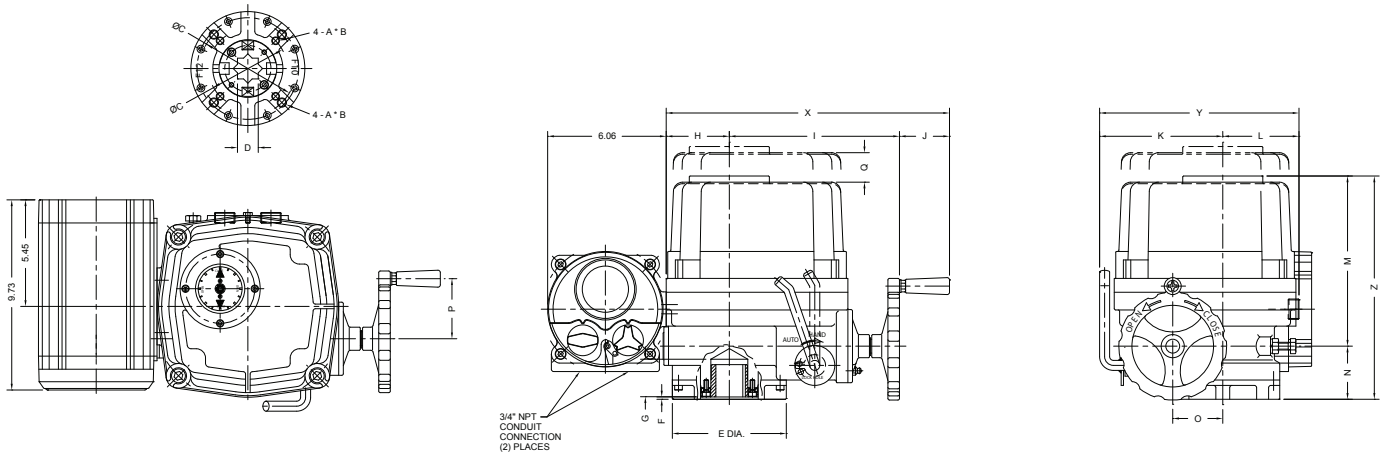

WE-17500, 25900 *Intelligent Digital Control Unit*

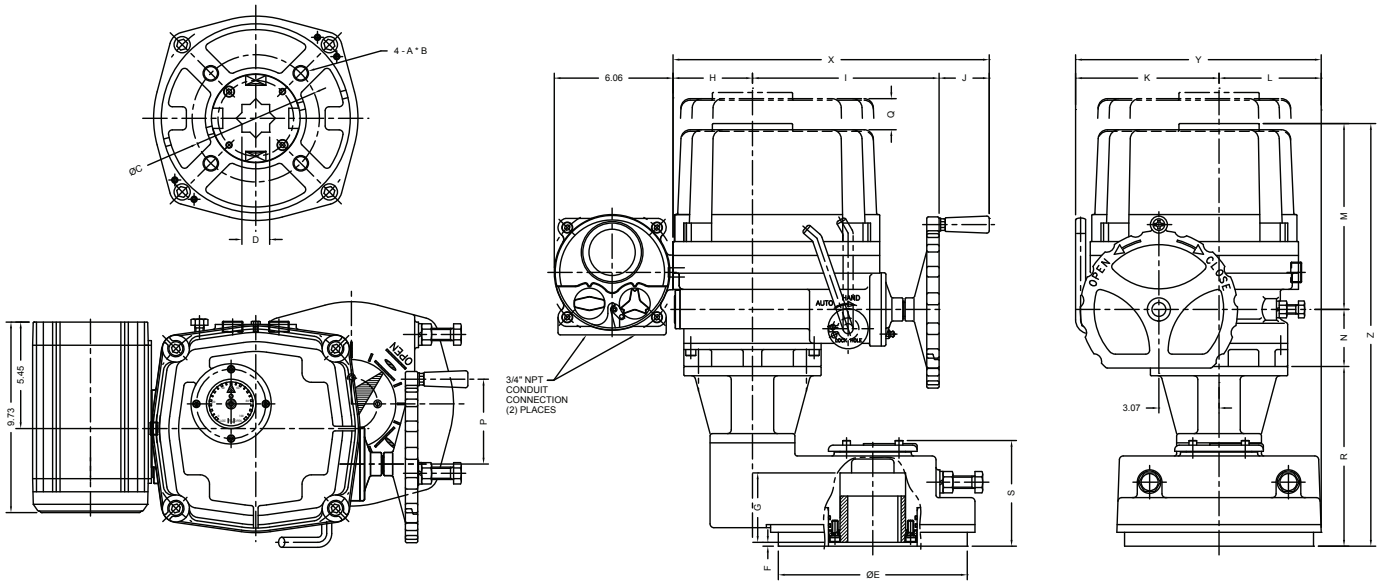

Dimensions (IN)

Model WE	ISO 5211	A	B	C	D sq	E	F	G	H	I	J	K	L	M	N	O	P	Q	R	S	X	Y	Z
-1350	F07/F10	M8/M10	0.47/0.59	2.756/4.016	0.748	4.92	0.12	1.65	2.87	7.87	2.56	5.59	3.43	7.56	2.68	2.13	3.07	6.30	-	-	13.31	9.02	10.55
-1700	F07/F10	M8/M10	0.47/0.59	2.756/4.016	0.748	4.92	0.12	1.65	2.87	7.87	2.56	5.59	3.43	7.56	2.68	2.13	3.07	6.30	-	-	13.31	9.02	10.55
-2640	F10/F12	M10/M12	0.59/0.71	4.016/4.921	1.063	5.83	0.12	1.93	3.23	8.70	2.56	6.30	3.90	8.70	2.72	2.56	3.07	7.09	-	-	14.49	10.20	11.42
-4400	F10/F12	M10/M12	0.59/0.71	4.016/4.921	1.063	5.83	0.12	1.93	3.23	8.70	2.56	6.30	3.90	8.70	2.72	2.56	3.07	7.09	-	-	14.49	10.20	11.97
-5200	F10/F12	M10/M12	0.59/0.71	4.016/4.921	1.063	5.83	0.12	1.93	3.23	8.70	2.56	6.30	3.90	8.70	2.72	2.56	3.07	7.09	-	-	14.49	10.20	11.97
-6900	F14	M16	0.95	5.512	1.417	7.01	0.12	2.24	4.06	9.53	2.56	7.32	4.37	9.49	2.91	3.07	4.33	8.27	-	-	16.14	11.69	12.99
-10500	F14	M16	0.95	5.512	1.417	7.01	0.12	2.24	4.06	9.53	2.56	7.32	4.37	9.49	2.91	3.07	4.33	8.27	-	-	16.14	11.69	12.99
-17500	F16	M20	1.18	6.496	1.417	9.65	0.20	3.54	4.06	9.53	2.56	7.32	5.24	9.49	2.91	3.07	4.33	8.27	9.17	5.24	16.14	12.56	22.17
-25900	F16	M20	1.18	6.496	1.417	9.65	0.20	3.54	4.06	9.53	2.56	7.32	5.24	9.49	2.91	3.07	4.33	8.27	9.17	5.24	16.14	12.56	22.17

Dimensional Drawing

WE-1350, 1700, 2640, 4400, 5200, 6900, 10500 *Semi-integral Control Unit*

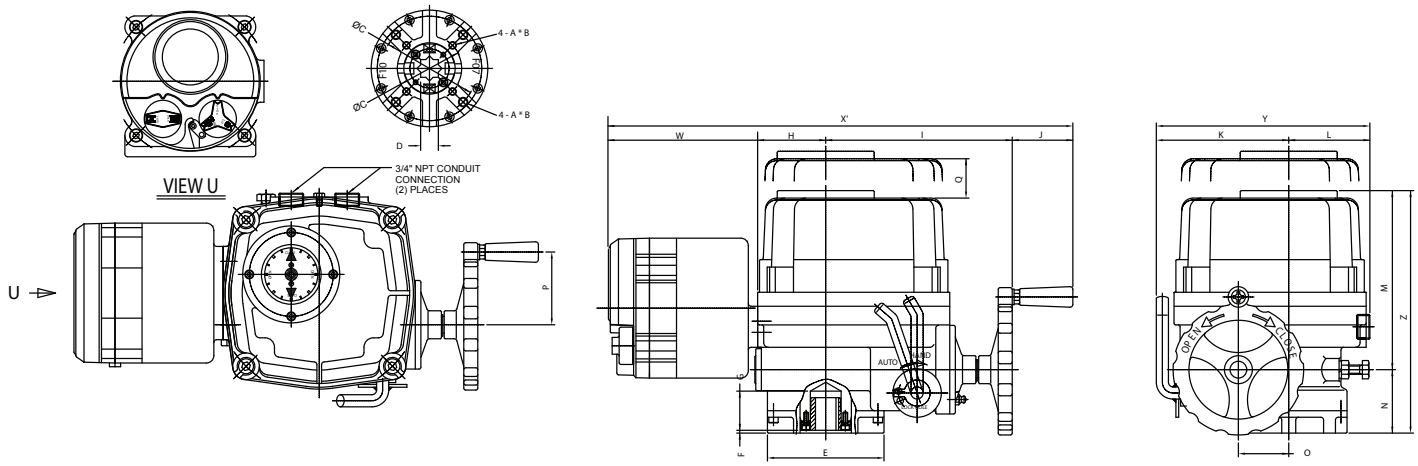

WE-17500, 25900 *Semi-integral Control Unit*

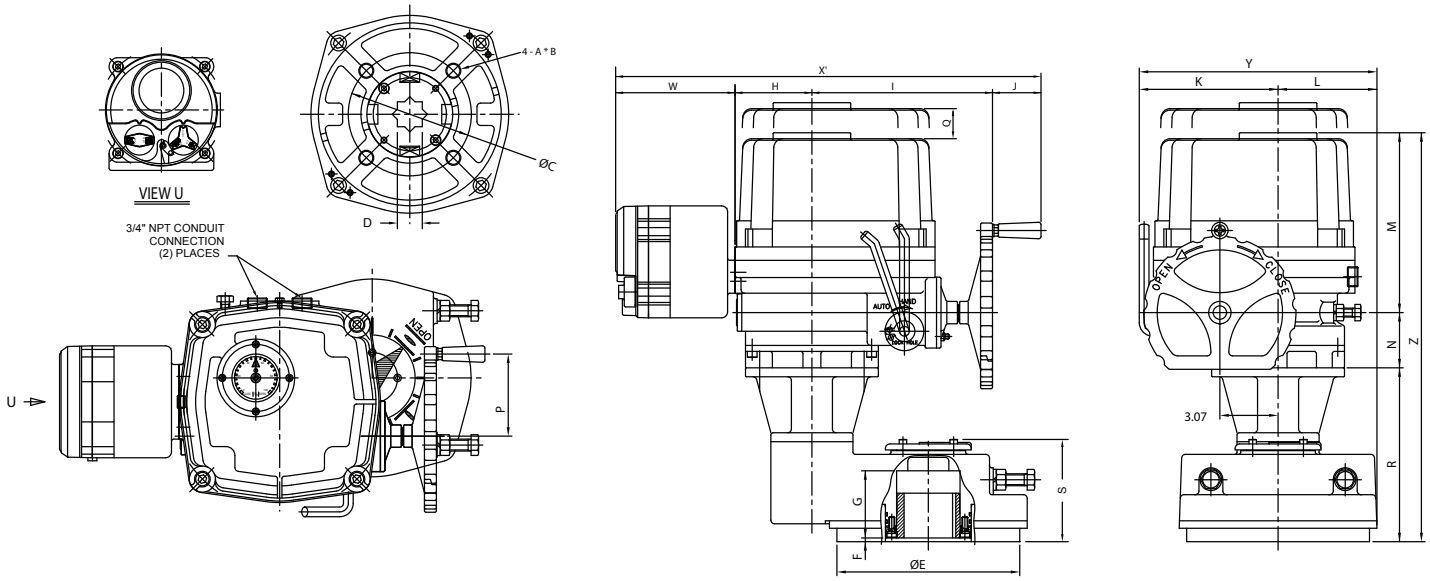

Dimensions (IN)

Model WE	ISO 5211	A	B	C	D sq	E	F	G	H	I	J	K	L	M	N	O	P	Q	R	S	X	Y	Z
-690	F07	M8	0.47	2.756	0.669	3.46	0.12	1.26	1.97	6.18	2.01	3.94	2.76	6.57	2.09	1.57	2.36	4.72	-	-	10.16	6.69	9.25
-1350	F07/F10	M8/M10	0.47/0.59	2.756/4.016	0.748	4.92	0.12	1.65	2.87	7.87	2.56	5.59	3.43	7.56	2.68	2.13	3.07	6.30	-	-	13.31	9.02	10.55
-1700	F07/F10	M8/M10	0.47/0.59	2.756/4.016	0.748	4.92	0.12	1.65	2.87	7.87	2.56	5.59	3.43	7.56	2.68	2.13	3.07	6.30	-	-	13.31	9.02	10.55
-2640	F10/F12	M10/M12	0.59/0.71	4.016/4.921	1.063	5.83	0.12	1.93	3.23	8.70	2.56	6.30	3.90	8.70	2.72	2.56	3.07	7.09	-	-	14.49	10.20	11.42
-4400	F10/F12	M10/M12	0.59/0.71	4.016/4.921	1.063	5.83	0.12	1.93	3.23	8.70	2.56	6.30	3.90	8.70	2.72	2.56	3.07	7.09	-	-	14.49	10.20	11.97
-5200	F10/F12	M10/M12	0.59/0.71	4.016/4.921	1.063	5.83	0.12	1.93	3.23	8.70	2.56	6.30	3.90	8.70	2.72	2.56	3.07	7.09	-	-	14.49	10.20	11.97
-6900	F14	M16	0.95	5.512	1.417	7.01	0.12	2.24	4.06	9.53	2.56	7.32	4.37	9.49	2.91	3.07	4.33	8.27	-	-	16.14	11.69	12.99
-10500	F14	M16	0.95	5.512	1.417	7.01	0.12	2.24	4.06	9.53	2.56	7.32	4.37	9.49	2.91	3.07	4.33	8.27	-	-	16.14	11.69	12.99
-17500	F16	M20	1.18	6.496	1.417	9.65	0.20	3.54	4.06	9.53	2.56	7.32	5.24	9.49	2.91	3.07	4.33	8.27	9.17	5.24	16.14	12.56	22.17
-25900	F16	M20	1.18	6.496	1.417	9.65	0.20	3.54	4.06	9.53	2.56	7.32	5.24	9.49	2.91	3.07	4.33	8.27	9.17	5.24	16.14	12.56	22.17

See wiring drawings reference on page 15 or call factory for special requests.

WE-53000 & WE-80000

ELECTRIC ACTUATORS

Technical Information

Acutator Model	Maximum Load Torque	Speed 60/50 Hz	Mounting Size	Rated Current(A) 60Hz			Motor Insulation Class	Maximum Bore Size (mm)		Duty Cycle	Number of Handwheel Turns	Weight
				1 Phase	3 Phase							
	In-Lbs	Sec/90°	ISO 5211	220V	380V	440V	AC 1PH 50/60Hz			S2		Lbs.
WE-53000	53000	66 / 78 sec.	F25/F30	6.3	3.3	1.8	F	100	100	30%	39	474
WE-80000	80000	99 / 117 sec.		6.3	3.3	1.8						

Standard Specifications

Enclosure	Weatherproof enclosure IP67, Type 4, 4X & 6, O-ring Sealed
Power Supply	220VAC/1PH/60Hz, 380/440/VAC/3Ph/60Hz ± 10%
Duty Cycle	30%
Motor	Squirrel Cage induction motor
Aux. Limit Switches	2 each for Open/Close, SPDT, 250 VAC, 10A Rating
Torque Switches	1 each for Open/Close, SPDT, 250 VAC, 10A Rating
Space Heater	10W (220VAC) Anti-condensation
Manual Override	Declutchable
Cable Conduit	Two 3/4" NPT
Movement Angle	90° ± 5°
Ambient Temperature	-4°F to 158°F (optional -40°F Low Temp Kit)
Ambient Humidity	90% RH Max (Non-Condensing)
Position Indicator	Continuous mechanical indicator with arrow
Self Locking	Provided by double worm gearing (no brake)
Mechanical Stopper	1 for each travel end (open/close), external & adjustable
Stall Protection / Set Temp	Built in thermal protection, Open 302°F (150°C) / Close 207°F (97°C)
Terminal Block	Spring loaded lever push type
Eternal Coating	Polyester powder coating
Lubrication	EP type grease
Anti-Vibration	XYZ 10g, 0.2~34Hz, 30 minutes

Features

- Compact, robust and lightweight construction covers a wide range of torques up to 80,000 In-lbs.
- Polyester powder coated exterior and hard anodized aluminum interior provides excellent protection from the most severe industrial environments.
- Double worm gear design prevents any valve movement from dynamic forces within the pipeline.
- Standard ISO 5211 mounting configuration for direct mount.
- Declutchable manual override with hand wheel.
- Mechanical torque switches prevent motor and gear set damage during excessive torque scenarios.
- Large visual indicator allows for positive visual position indentification from greater distances.
- Digitized control components.

Dimensions

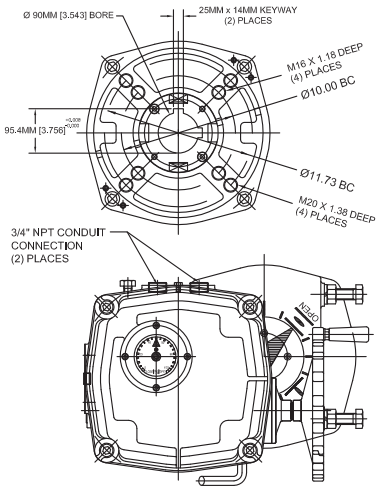

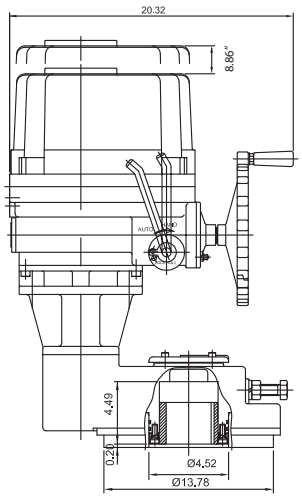

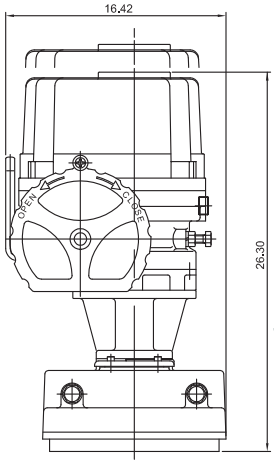

How to order WE/XE Series

TRIAC® WE / XE Series Part Number Reference

1. Model	
WE	Weather Proof, CSA TYPE 4, 4X, IP67
XE	Explosion Proof Design, ATEX & IECEx Ex d IIB T4 Gb, IP67
SE	Submersible unit (IP68, 10 meters for 72 Hours)

2. Main Control			
Blank	2-Position Control (Open / Close)		
M	Standard Modulating Control Card with transmitter [4]		500 - 10500
D	Modulating Card (TDC-100 or TDC-400)	See *7 Misc. Options 1* for transmitter	500 - 10500
E	Ethernet/IP	(go to 3)	500 - 25900
P	Profibus DP	(go to 3)	500 - 25900
R	Modbus RTU Single Channel	(go to 3)	500 - 25900
T	Modbus/TCP	(go to 3)	500 - 25900
U	Modbus RTU Dual Channel Isolated	(go to 3)	500 - 25900
L	Boiler Feed (4-20mA)	*TSM extension recommended*	500 - 25900
S	Boiler Feed (0-135Ω)	*TSM extension recommended*	500 - 25900
Y	Fireye Burner Control	*(Proprietary)*	500 - 25900

3. Main Control Type (with Communication Option)	
Blank	No Communication Control Type
A	Communication Control, Proportional Control/Feedback
B	Communication Control, (2) Position Control (Open/Close)

4. Actuator Size			
350	350 In-Lbs	5200	5200 In-Lbs
350HS	270 In-Lbs	6900	6900 In-Lbs
500	500 In-Lbs	10500	10500 In-Lbs
690	690 In-Lbs	17500	17500 In-Lbs
1350	1350 In-Lbs	25900	25900 In-Lbs
1700	1700 In-Lbs	53000	53000 In-Lbs
2640	2640 In-Lbs	80000	80000 In-Lbs
4400	4400 In-Lbs		

5. Motor		Applicable Models
X	110VAC/1PH [1] *Place holder only - omit when at end of part number*	
A	24VDC/VAC - On/Off [1] *(includes motor reversing control card)*	500 - 2640
C	24VDC *(DC motor only unless with 2 - Main Control option)*	500 - 2640
N	12VDC/VAC - On/Off *(includes motor reversing control card)*	690
B	12VDC *(DC motor only unless with 2 - Main Control option)*	690
D	24VAC/1PH	500 - 2640
E	220VAC/1PH [1]	500 - 80000
F	220VAC/3PH [3]	1350 - 80000
G	380VAC/3PH [3]	1350 - 80000
H	480VAC/3PH [3]	1350 - 80000
K	440VAC/3PH [3]	1350 - 80000

6. Secondary Control Options		Applicable Models
X	No options *Place holder only - omit when at end of part number*	
B	Semi-integral Control Unit (1PH/3PH)	WE/XE 690 - 25900
C	Intelligent Digital Control Unit (1PH/3PH)	WE/XE 690 - 80000
D	Local / Remote Control Switches	WE 500 - 25900
E	RCT Electronic Speed Control Module [2] *(both directions standard)*	*(24VAC, 110VAC, 220VAC only)* 500 - 25900
F	AMI AC Motor Interface & Speed Control	*(24VAC, 110VAC, 220VAC only)* 500 - 25900
G	AST Sequence Timer	500 - 25900
HS1	High Speed 1	*See High Speed Options*
HS2	High Speed 2	*See High Speed Options*
R	2-Wire Control [1] [2]	110VAC control voltage
S	2-Wire Control [1] [2]	24VAC control voltage
T	2-Wire Control [1] [2]	24VDC control voltage

7. Miscellaneous Options 1		Applicable Models
Blank	No designation, Actuator Series Standard	
X	Multiple Option Designation	
T	0-10VDC or 4-20mA Transmitter *(specify)* (On/Off or modulating control "D")	
G	General I/O Module (with TMC4 only, CF for options)	
N	1000 Ohm Potentiometer [1]	
O	5000 Ohm Potentiometer [1]	
P	10K Ohm Potentiometer [1]	
Y	180º Operation	500 - 10500
Z	270º Operation	690 - 10500
3	180º Operation, 3-Position Control	500 - 10500
4	270º Operation, 4-Position Control [2]	690 - 10500
8	180º Operation, 3-Position Control Board for WE-500 Wine Application	
9	90º Operation, 3-Position Control [2]	500 - 25900
L	-40ºF Low Temp Kit	500 - 25900
I	Visual LED Indicator (Open/Close/Power)	690 - 10500
S	(4) Auxillary limit switches (6 total)	690 - 25900

[1] XE-500 applicable options
[2] Use *10-Miscellaneous Options 2* to specify direction
[3] Customer-supplied motor starter is required unless ordered with *6-Secondary Control Options* code B or C. Default control voltage without B or C modules is 110V for F-220V, K-440V & H-480V, and 220V for G-380V. Control voltage other than the default must be specified on order.
** Floor Drive Mounting Configuration - See Floor Drive Catalog
[4] Transmitter not included for models XEM-690B and XEM-690C. See *7 - Misc. Options 1* for transmitter.

8. Conduit Thread Options	
Blank	No Designation, Actuator Series Standard
X	Multiple Option Designation
M	M20
A	M25

9. Drive Bushing	
Blank	No Designation, Actuator Series Standard
X	Multiple Option Designation
D	Nonstandard DD Drive Bushing
K	Nonstandard Key Drive Bushing
N_ _	Nonstandard Star Drive Bushing, Followed by Drive Size in mm (ex. N14)
6	316 Stainless Steel Standard Drive Size

10. Miscellaneous Options 2		Applicable Models
Blank	No Designation, Actuator Series Standard	
X	Multiple Option Designation	
2	F12 Mounting	6900 -10500
4	F14 Mounting	17500 - 25900
C	Corrosion Resistant NANO Polymer Coating	
L	CCW Operation	500 - 25900
R	CW Operation	500 - 25900
S	125 g Shock Configuration	690 - 10500
P	Non Standard Coating Color	

HOW TO ORDER ELECTRIC ACTUATORS

1	2	3	-	4	5	6	7	-	8	-	9	-	10
↓	↓	↓		↓	↓	↓	↓		↓		↓		↓
WE	M		-	2640	X	X	X	-	X	-	X	-	C

Example

WEM-2640_ _ _-_-_-_
(Weather Proof Housing, Modulating Control, model size 2640, 110VAC / 1PH)

Other options available upon request
A-T Controls reserves the right to change product designs and technical/dimensional specifications without notice.

Specials and Applied Solutions

While you have come to know A-T Controls for superior service in automated valves and day-to-day automation and controls, we specialize in offering solutions to your more unique and difficult applications. Listed below are some of the electric specials and solutions oriented products and services we offer.

Electric Floor Damper Drive

Butterfly Valve Tee Assemblies

See these catalogs for additional offerings included in the TRIAC® Electric Actuator product line:

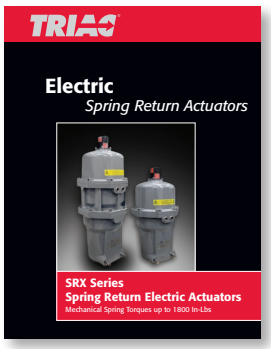

XC Series

C 258948 US
TYPE 4, 4X, 6 & 7

CSA Certification

Class I, Division 1, Groups C, D T4
Ex d IIB T4 Gb
Class I, Zone 1, AEx d IIB T4 Gb
TYPE 4, 4X, 6 & 7, IP66/IP67

Standard Features

- Visual position indicator
- Torque switches (XC-01350 – XC-25900)
- Anti-condensation heater and thermostat
- Two auxiliary limit switches
- Self-locking gear train
- Manual handwheel with torque from 690 in-lbs to 25900 in-lbs
- Available supply voltages: 12VDC, 24VDC, 24VAC, 120VAC & 220VAC
- Optional proportional control (select sizes and voltages)
- Various inputs with feedback available

See **How To Order XC Series** on page 4

Triac XC Series Actuators

The Triac XC Series Actuators are CSA Certified Type 4, 4X, 6 & 7 for hazardous locations and meet UL 1203 standard. The actuators are rugged and reliable with powder coated anodized aluminum housing for use in Oil, Gas, Chemical & Power Gen applications. The XC Series is the perfect match for resilient or high-performance butterfly valves and dampers because of the self-locking, double reduction worm drive and torque switches. The XC Series is also ideal for ball, plug or any rotary valve requiring automation in a hazardous location.

NOTE: XC Series Actuators cannot be used in applications where there is exposure to acetic acid or methanol.

Actuator Model	Maximum Load Torque				Speed, sec/90°				Full Load Amps (FLA)				Locked Rotor Amps (LRA)				Duty Cycle*				Hand-wheel Turns	Lbs
	In-Lbs				60Hz	60Hz	60Hz/ DC	DC	60Hz	60Hz	60Hz/ DC	DC	60Hz	60Hz	60Hz/ DC	DC	S4 (IEC 60034-1)					
XC	110 VAC	220 VAC	24V AC/DC	12 VDC	110 VAC	220 VAC	24V AC/DC	12 VDC	110 VAC	220 VAC	24V AC/DC	12 VDC	110 VAC	220 VAC	24V AC/DC	12 VDC	110 VAC	220 VAC	24V AC/DC	12 VDC		
-00690	690	690	620	350	20	20	17	11	1.2	0.6	5	13.5	1.4	0.7	12.8	21.7	40%	40%	30%	30%	10	16.4
-00860	860	790	700	440	20	20	20	11	1.2	0.6	6.3	13.5	1.4	0.7	12.8	21.7	40%	40%	30%	30%	10	16.4
-01350	1350	1350	1350	-	21	23	22	-	2	1	6	-	2.5	1.2	16.9	-	70%	35%	40%	-	11	36.7
-01700	1700	1590	1410	-	21	23	22	-	2.3	1.1	7.4	-	2.5	1.2	16.9	-	70%	35%	40%	-	11	36.7
-02640	2640	2300	2120	-	26	26	32	-	2.3	1.3	8.9	-	2.9	1.4	30.8	-	70%	40%	35%	-	13.5	48.6
-04400	3980	3980	-	-	29	29	-	-	4.5	1.9	-	-	5	2.4	-	-	30%	30%	-	-	13.5	50.8
-06900	6900	6900	-	-	31	34	-	-	5.1	2.4	-	-	7.3	3.8	-	-	30%	30%	-	-	16.5	64
-10500	9600	8300	-	-	31	34	-	-	5.4	3.4	-	-	7.3	3.8	-	-	30%	30%	-	-	16.5	64
-17500	17500	17500	-	-	93	93	-	-	5.8	2.4	-	-	7.3	3.8	-	-	30%	30%	-	-	49.5	167
-25900	25900	25900	-	-	93	93	-	-	6.3	3.4	-	-	7.3	3.8	-	-	30%	30%	-	-	49.5	167

*DUTY CYCLE: FULL LOAD WITH 158°F AMBIENT TEMP

Dimensional Drawings

XC-00690, 00860, 01350, 01700, 02640, 04400, 06900, 10500

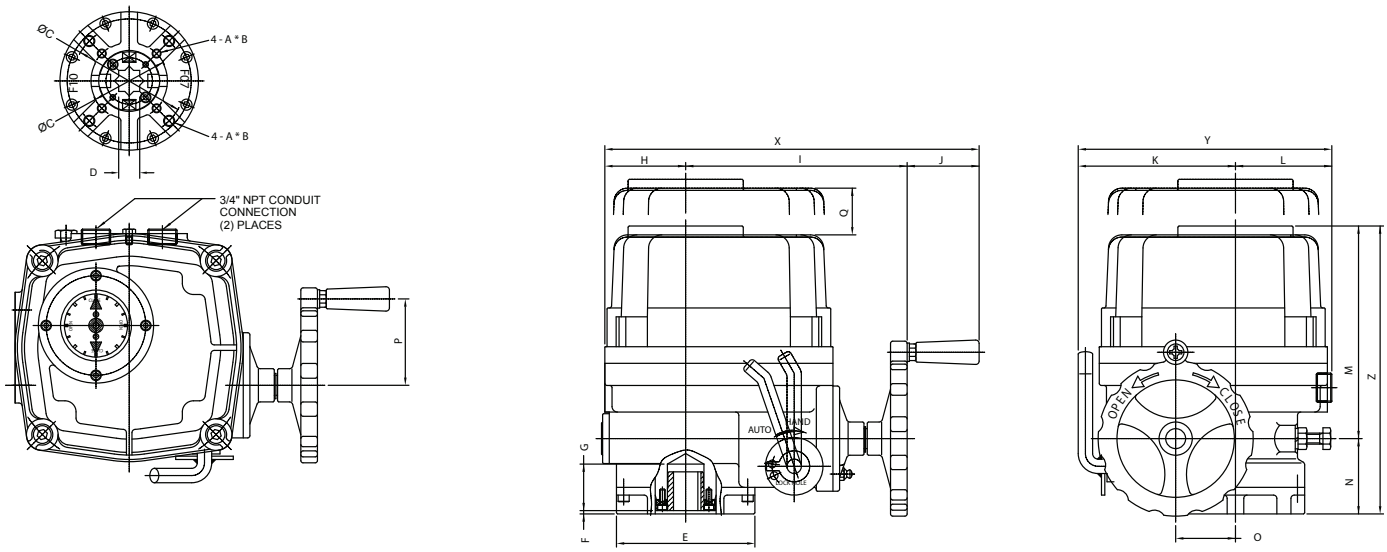

XC-17500, 25900

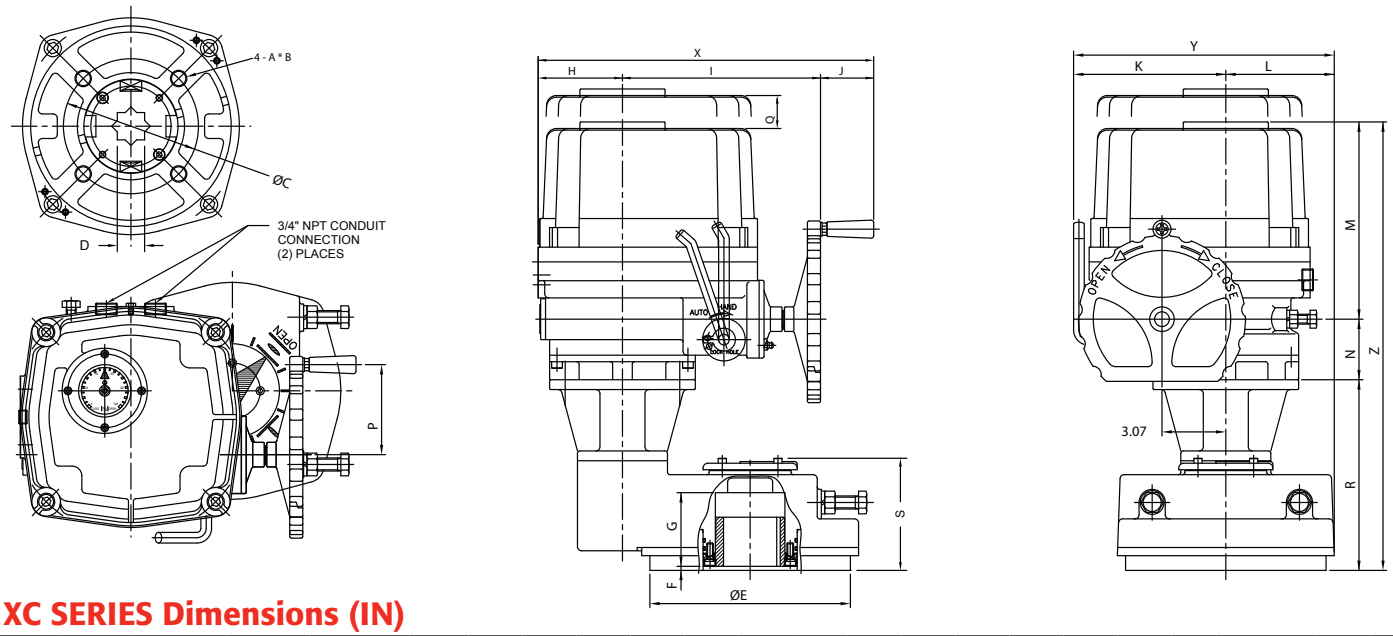

XC SERIES Dimensions (IN)

Model XC	ISO 5211	A	B	C	D sq	E	F	G	H	I	J	K	L	M	N	O	P	Q	R	S	X	Y	Z
-00690	F07	M8	0.47	2.756	0.669	3.46	0.12	1.26	1.97	6.18	2.01	3.94	2.76	7.10	2.09	1.57	2.36	4.72	-	-	10.16	6.69	9.78
-00860	F07	M8	0.47	2.756	0.669	3.46	0.12	1.26	1.97	6.18	2.01	3.94	2.76	7.10	2.09	1.57	2.36	4.72	-	-	10.16	6.69	9.78
-01350	F07/F10	M8/M10	0.47/0.59	2.756/4.016	0.748	4.92	0.12	1.65	2.87	7.87	2.56	5.59	3.43	8.09	2.68	2.13	3.07	6.30	-	-	13.31	9.02	11.08
-01700	F07/F10	M8/M10	0.47/0.59	2.756/4.016	0.748	4.92	0.12	1.65	2.87	7.87	2.56	5.59	3.43	8.09	2.68	2.13	3.07	6.30	-	-	13.31	9.02	11.08
-02640	F10/F12	M10/M12	0.59/0.71	4.016/4.921	1.063	5.83	0.12	1.93	3.23	8.70	2.56	6.30	3.90	9.23	2.72	2.56	3.07	7.09	-	-	14.49	10.20	11.95
-04400	F10/F12	M10/M12	0.59/0.71	4.016/4.921	1.063	5.83	0.12	1.93	3.23	8.70	2.56	6.30	3.90	9.23	2.72	2.56	3.07	7.09	-	-	14.49	10.20	12.50
-06900	F14	M16	0.95	5.512	1.417	7.01	0.12	2.24	4.06	9.53	2.56	7.32	4.37	10.02	2.91	3.07	4.33	8.27	-	-	16.14	11.69	13.52
-10500	F14	M16	0.95	5.512	1.417	7.01	0.12	2.24	4.06	9.53	2.56	7.32	4.37	10.02	2.91	3.07	4.33	8.27	-	-	16.14	11.69	13.52
-17500	F16	M20	1.18	6.496	1.417	9.65	0.20	3.54	4.06	9.53	2.56	7.32	5.24	10.02	2.91	3.07	4.33	8.27	9.17	5.24	16.14	12.56	22.70
-25900	F16	M20	1.18	6.496	1.417	9.65	0.20	3.54	4.06	9.53	2.56	7.32	5.24	10.02	2.91	3.07	4.33	8.27	9.17	5.24	16.14	12.56	22.70

How to order XC Series

TRIAC® XC Series
CSA Approved Explosion Proof Actuators
Part Number Reference

Series	
XC	Explosion Proof, CSA Class I, Division 1, Groups C, D; T4 Type 4, 4X, 6 & 7, IP66/IP67 Ex d IIB T4 Gb Class I, Zone 1, AEx d IIB T4Gb

C US
258948
TYPE 4, 4X, 6 & 7

Control	
Blank	(2) Position Control (Open / Close)
D	Modulating Controller (Sizes 01350 -01700) See Note 2

Actuator Size	Output Torque 110 VAC	220 VAC	24V AC/DC	12 VDC
-00690	690	690	620	350
-00860	860	790	700	440
-01350	1,350	1,350	1,350	-
-01700	1,700	1,590	1,410	-
-02640	2,640	2,300	2,120	-
-04400	3,980	3,980	-	-
-06900	6,900	6,900	-	-
-10500	9,600	8,300	-	-
-17500	17,500	17,500	-	-
-25900	25,900	25,900	-	-

Motor		
X	110VAC/1PH	
A	24VDC/24VAC on/off	(Sizes 00690 - 02640)
B	12VDC	(Sizes 00690 & 00860)
C	24VDC	XCD MODELS ONLY (Sizes 01350 - 01700)
E	220VAC /1PH	
N	12VDC/12VAC on/off	(Sizes 00690 - 00860)

Options	Note: Add all miscellaneous options to end of part number	
Blank	No options	
XT	0-10VDC/4-20mA Transmitter	XCD MODELS ONLY

NOTE:
(1) Class I, Division 2 areas require a certified seal-off fitting during installation.
(2) cCSAus certification only applies to sizes 01350 & 01700 when used with motor voltage C or E.

Example

XC-01350X - Triac Explosion Proof Electric Actuator, 1350 In-Lbs (150Nm), 21 Second Operation, 110VAC/1PH, 50-60Hz, 2 FLA, Two Position Control, ISO Mounting, 10 Watts Compartment Heater & Thermostat, (2) Auxiliary Limit Switches with Independent Cams, (2) Torque Switches, Diecast Anodized Aluminum Polyester Coated Construction, Class F Extended Duty Fan Motor, Manual Override, (2) 3/4" NPT Conduit Connections, F07/F10 ISO Mounting Pad, 19MM (0.748) Star Output Drive, cCSAus Approved Class I, Division 1, Groups C, D; T4, Ex d IIB Gb T4, Class I, Zone 1, AEx d IIB Gb T4, Type 4, 4X, 6 & 7, IP66, IP67, Ambient Temp = -20°C to +60°C
Color - Silver

A-T Controls reserves the right to change product designs and technical/dimensional specifications without notice. See website for updates.

KE Series

Standard Features

- *Convex lens* visual position indicator makes it easier to observe without water collecting on the surface of the indicator
- Anti-condensation heater
- Two auxiliary limit switches
- Self-locking gear train
- Manual override with wrench
- Available motor voltages: 12VDC, 24VDC, 120VAC & 220VAC
- Optional 4-20mA & 0-10 VDC proportional control
- Duty Cycle (IEC60034-1), 50% max torque at 25°C/77°F
  - On/Off – S2 continuous 15 minutes max
  - Modulating – S4 intermittent, 50%, 1200 starts per hour
- Temperature Range: -4° F to 140° F

Triac KE Series Actuators

The Triac KE Series electric actuators are the perfect match for resilient or high-performance butterfly valves and dampers because of the self-locking worm drive. The KE Series actuators are used to control rotary valves, such as butterfly valves, ball valves, plug valves, etc. Widely used in applications such as petroleum, chemical, water treatment, ship, paper, power stations, heating supply, building automation, light industry etc.

Unique low profile actuator, ideal for tight spaces

Dimensional Drawing

KE-440 to -3500

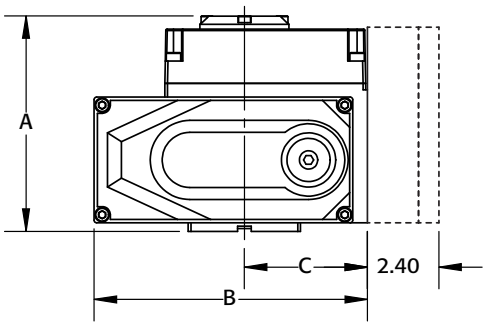

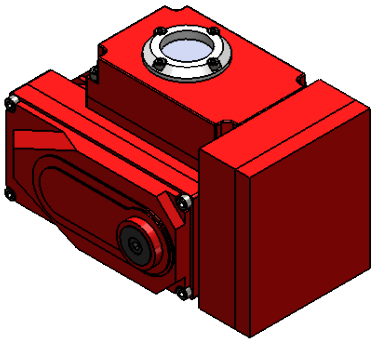

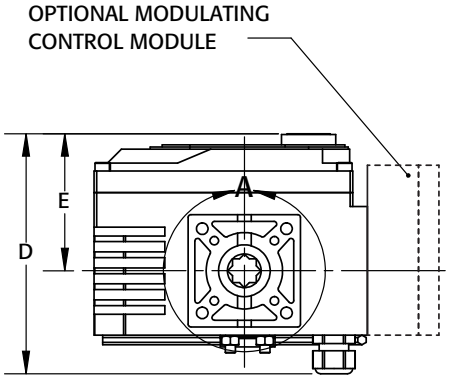

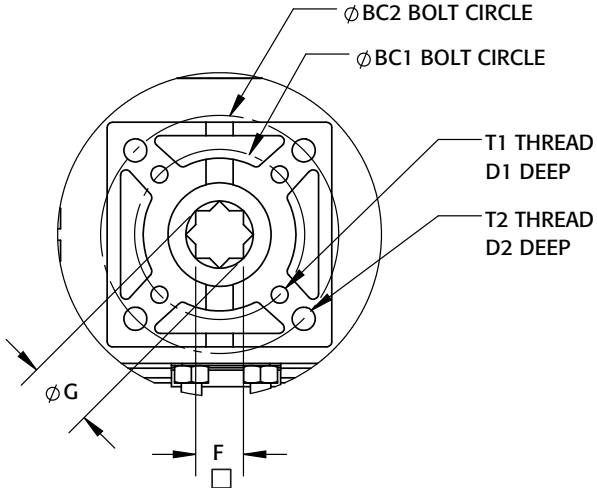

KE SERIES Dimensions (IN)

						Mounting Pad								
Model	A	B	C	D	E	ISO 5211	F	G	BC1	BC2	T1	D1	T2	D2
KE-440	5.14	6.74	3.07	5.44	3.12	F05/F07	0.551 x 0.67 Deep	0.76	1.969	2.756	M6 x 1	0.4	M8 x 1.25	0.5
KE-880	5.31	7.69	3.50	6.24	3.43	F05/F07	0.669 x 0.89 Deep	0.92	1.969	2.756	M6 x 1	0.4	M8 x 1.25	0.5
KE-1700	6.65	11.63	4.93	8.37	4.57	F10/F12	1.063 x 1.28 Deep	1.47	4.016	4.921	M10 x 1.5	0.6	M12 x 1.75	0.7
KE-3500	6.65	11.63	4.93	8.37	4.57	F10/F12	1.063 x 1.28 Deep	1.47	4.016	4.921	M10 x 1.5	0.6	M12 x 1.75	0.7

KE Motor Technical Data

Actuator Model	Maximum Load Torque		Speed, sec/90°				Rated Current				Lbs
			AC		DC		DC		1 Phase		
	In-Lbs	Nm	50 Hz	60 Hz	12V	24V	12V	24V	110VAC	220VAC	
KE-440	440	50	15	13	25	20	3.0	1.8	1.2	0.65	7.5
KE-880	880	100	15	13	25	20	5.3	2.8	1.3	0.9	12
KE-1700	1700	200	20	17	N/A	20	N/A	7.5	1.3	0.6	21
KE-3500	3500	400	20	17	N/A	30	N/A	7.5	2.5	1.2	21

A-T Controls reserves the right to change product designs and technical/dimensional specifications without notice.

KE Series Actuators

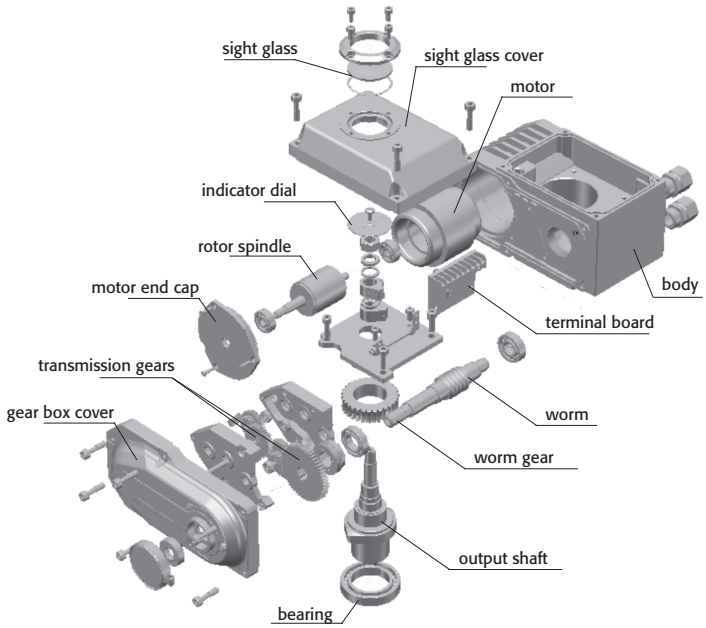

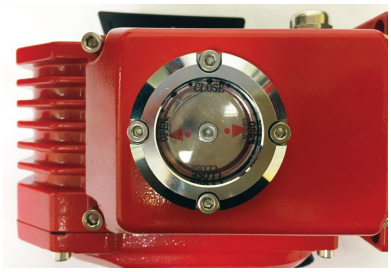

Convex lens visual position indicator

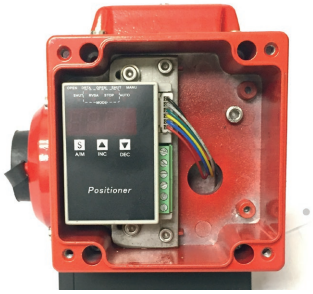

4-20mA/0-10 VDC Modulating Control Module

TRIAC® KE Series Electric Actuator Part Number Reference

1. Model	
KE	Weather-Proof IP67 Electric Actuator

2. Main Control		
Blank	(2) Position Control (Open / Close)	
M	Standard Modulating Control Card with transmitter	
E	Ethernet/IP	(go to 3)
P	Profibus DP	(go to 3)
R	Modbus RTU Single Channel	(go to 3)
T	Modbus/TCP	(go to 3)
U	Modbus RTU Dual Channel Isolated	(go to 3)
4	TMC4 Modulating Card	

3. Main Control Type (with Communication Option)	
Blank	No Communication Control Type
A	Communication Control, Proportional Control/Feedback
B	Communication Control, (2) Position Control (Open/Close)

4. Actuator Sizes	
440	440 In-Lbs
880	880 In-Lbs
1700	1700 In-Lbs
3500	3500 In-Lbs

5. Motor	
X	110/120VAC/1PH *Place holder only - omit when at end of the part number*
A	24VDC On/Off *(includes motor reversing control card)*
C	24VDC *(DC motor only unless with 2 - Main Control option)*
N	12VDC/VAC On/Off (Size 440 & 880 only) *(includes motor reversing control card)*
B	12VDC *(DC motor only unless with 2 - Main Control option)*
D	24VAC/1PH
E	220VAC/1PH

6. Secondary Control Options	
X	No options/Standard - *Omit when at end of the part number*
B	Semi-Integral Control
D	Local/Remote Control
E	RCT Electronic Speed Control [1] (both directions standard)
F	AMI AC Motor Interface & Speed Control
G	AST Sequence Timer
HS1	High Speed
R	2-Wire Control [1] (110 VAC control voltage)
S	2-Wire Control [1] (24 VAC control voltage)
T	2-Wire Control [1] (24 VDC control voltage)

[1] *Use 10 Miscellaneous Options 2 to specify direction*

7. Miscellaneous Options 1	
Blank	No designation, Actuator Series Standard
X	Multiple Option Designation
T	0-10VDC or 4-20mA Transmitter (On/Off)
N	1000 Ohm Potentiometer
G	General I/O Module (with TMC4 only, CF for options)
Y	180° Operation
Z	270° Operation

other options available upon request

8. Conduit Thread Options	
Blank	No designation, Actuator Series Standard
X	Multiple Option Designation
M	M20

9. Drive Bushing	
Blank	No designation, Actuator Series Standard
X	Multiple Option Designation

10. Miscellaneous Options 2	
Blank	No designation, Actuator Series Standard
X	Multiple Option Designation
L	CCW Operation
R	CW Operation
S	125 g Shock Configuration
P	Non Standard Coating Color

other options available upon request

HOW TO ORDER ELECTRIC ACTUATORS

1	2	3	-	4	5	6	7	-	8	-	9	-	10
↓	↓	↓		↓	↓	↓	↓		↓		↓		↓
KE	M		-	440	X	X	X	-	X	-	X	-	C

Example

KEM-880

Triac Worm Drive Electric Actuator, Weather-Proof IP67, 880 In-Lbs Torque Output, 13 Sec Cycle Speed, 110VAC/1PH, 0.75 Rated Amps, Modulating Control, (2) Auxiliary Limit Switches, Heater & Thermostat, Diecast Aluminum Powder Coated Construction, Manual Override with Wrench, (2) ½" NPT Conduit Entries, F05, F07, F10 Mounting Pad, 0.669 (17MM) Star Output Drive

TRIAC® CONTROLS

A-T Controls, Inc.

9955 International Blvd.
Cincinnati, Ohio 45246
www.atcontrols.com

PHONE (513) 247-5465
FAX (513) 247-5462
sales@atcontrols.com

WE_XE_XC_KE-20261012
Copyright 2013 A-T Controls, Inc.
LIT0021